FRIGOVENT
air curtains

for cold store doors and gates

FRIGOVENT

Mounting instructions

AUGUST 2018

Bakumer Str. 74 D-49324 Melle Phone 00495422 43328 Fax 00495422 43397 info@frigovent.com www. frigovent.com

1. The problems without air curtains

The Problems with open coldstore doors

Cold air is heavier than warm air.

When the coldstore door is open the heavy cold air flows to the outside via the bottom of the opened door.

At the same time the lighter warm and humid external air enters the coldstore through the top of the door opening (figg1).

Consequences of the harmful air exchange

The high moisture content of the inflowing warm air can cause icing damages:
Ice formation on ceilings, walls, floor and goods (danger of black ice).
Iced evaporators must be defrosted with great expenditure of energy.
The visibility is hindered by ice-covered strip curtains and swing doors.

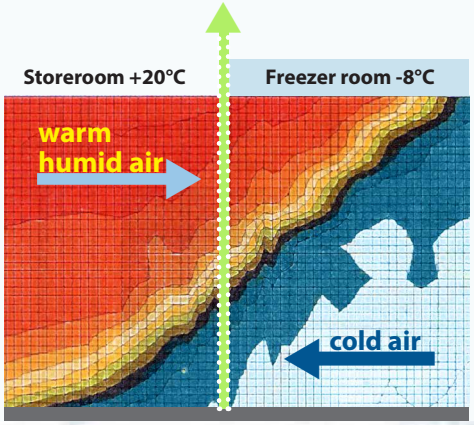

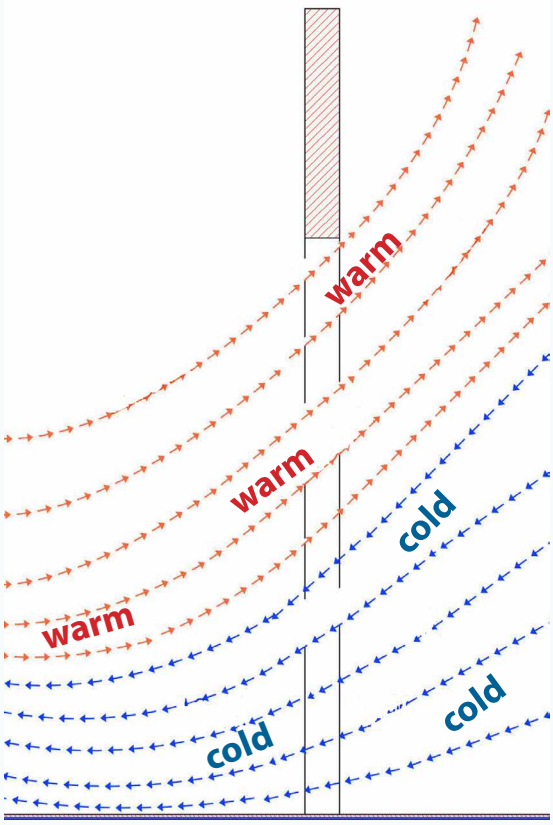

FIGG.1 Harmful air exchange

2. The solution by the use of air curtains

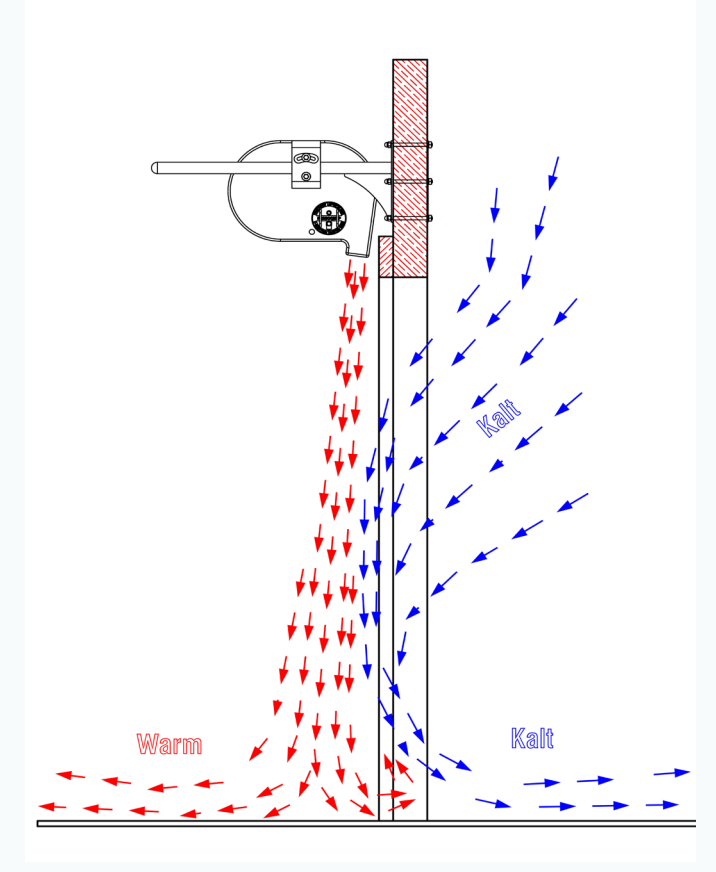

Perfect solution by FRIGOVENT air curtains

An air curtain is mounted above the door opening at the warm side of the wall (FIGG.2)
When opening the door, an air curtain system immediately switches on automatically.
It instantly forms a special air flow, which creates an invisible door in front of the door opening.
This is why cold air can no longer escape out of the freezer room and warm air cannot enter.

Thermography of air temperatures at an open freezer room door, which is sealed off by an air curtain system.

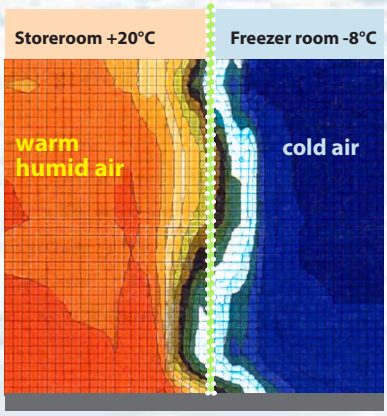

3. The proof of function

Function control

Warm and cold air are effectively separated by an invisible door of wind.
Cold air can not flow out and warm air can not flow in.
The smooth functioning of the FRIGOVENT is proved with the provided air-flow indicator.
The air flow indicator is placed on the threshold of the door.
The air velocity and the discharge angle of the system must be adjusted that the air-flow indicator no longer or only very slowly rotates.
Now you can be sure that there is no unwelcome air interchange.

The special advantages of FRIGOVENT air curtains

1. Air curtain in cantilever construction for mounting on large gates
The housing of the air curtain system can be mounted cantilevered over a distance up to 6 meters. During assembly, the system is placed on two brackets, which are mounted next to the door opening. On the brackets, the air curtains can be pushed up to one meter of the the door opening. So the Frigovent is particulary suitable for extra-wide door openings with cold room and freezer room sliding doors.

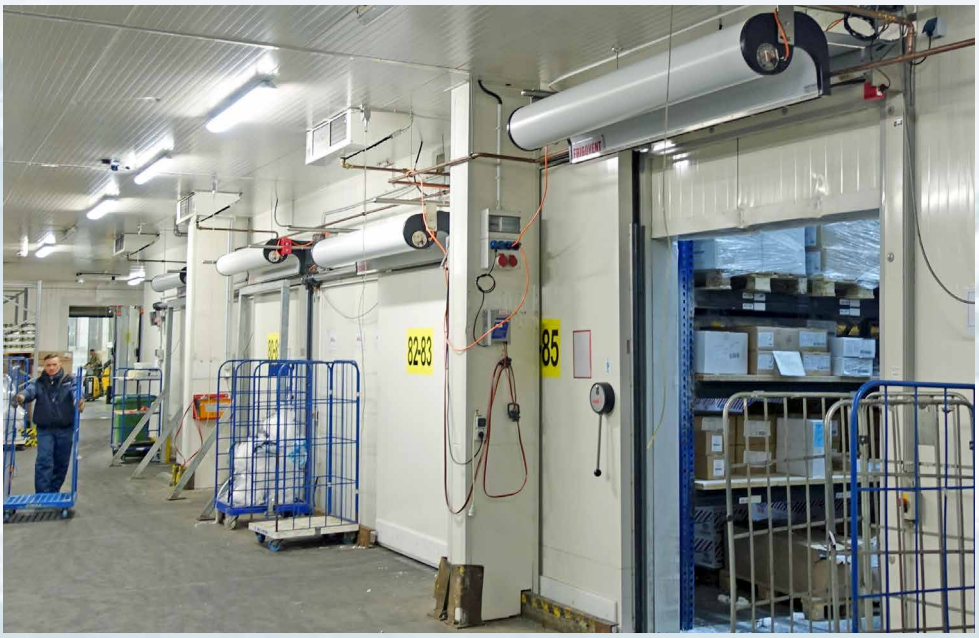

2. High operating safety.
Whenever the door is opened, a proximity switch activates the air curtain just when the door is removed from the switch.
So the fans are already powered up when the door is fully opened.
This is a special switch. It is completely sealed without any moving parts.
It is totally waterproofed and works with an operating current of only 24 volts.
It is a security switch, which cannot cause any electrical accidents.

3. The control of air velocity and air flow.
When adjusting the air curtain system the air discharge angle and the air speed must be set.
The air speed and thus the air flow is electronically controlled in all our blowers.
It can very easily be adjusted stepless.

4. Even in continuous operation the power consumption is extremely low and the operation sound too.
It can be used with AC motors or electronically commutated EC motors.
AC motors start quickly - but have a 30% higher power consumption.
EC motors run more slowly.
It takes about 5 seconds longer until the air curtain is available.
However, they have a very low power

consumption, are easy to fix, have a low-noise and are suitable for continuous operation.
The power consumption is about 30% less than that of the AC motors.
If the motors are regulated down, the power consumption drops further.
We recommend the use of EC-blowers at doors that are open long.

5. Fast and easy service
The system is controlled electronically.
There is a slide-in control with the electronics and all critical components, such as:

- The control of the fan speed.
- The circuit of the fan by contactless relays.
- The generation of the safety current - 24 Volt DC - for the proximity switch.
- The waterproof connector for this switch.

In case of failure, this slide-in control can be pulled by the operator and exchanged with a new one quickly.
This eliminates time-consuming trouble-shooting and allows a quick repair.
So a global fast service is available.

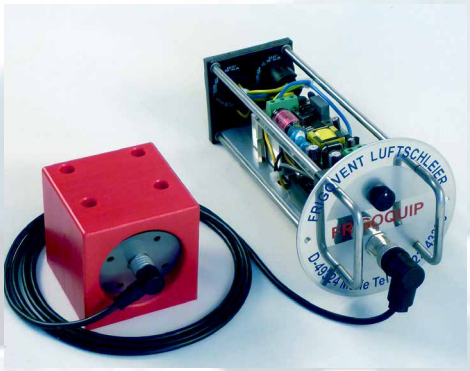

High-quality components - maintenance-free and reliable

6. An optimal laminar airflow separates cold air of the cooling chamber of the warm and humid air of the antechamber.

FRIGOVENT air curtains are mounted on the warm side of the wall above the fridge or cooling chamber door.
The fans suck the warm air of the antechamber and blow it through the air nozzles and through the air rectifier down to the ground.
When the airflow hits the ground, it divides so that the cold air remains in the cold room and the warm air stays outside.
The air flow is generated by radial blowers, is compressed in the pressure chamber of the plant and then accelerated through a nozzle and spread over the entire unit width.
It smoothes the airflow, so that it is tighter and the ranges is higher.
The result is a homogeneous, turbulence-free air curtain with high penetration and stable flow direction, which does not mix with the entrained air masses.
A particularly effective operation is ensured.

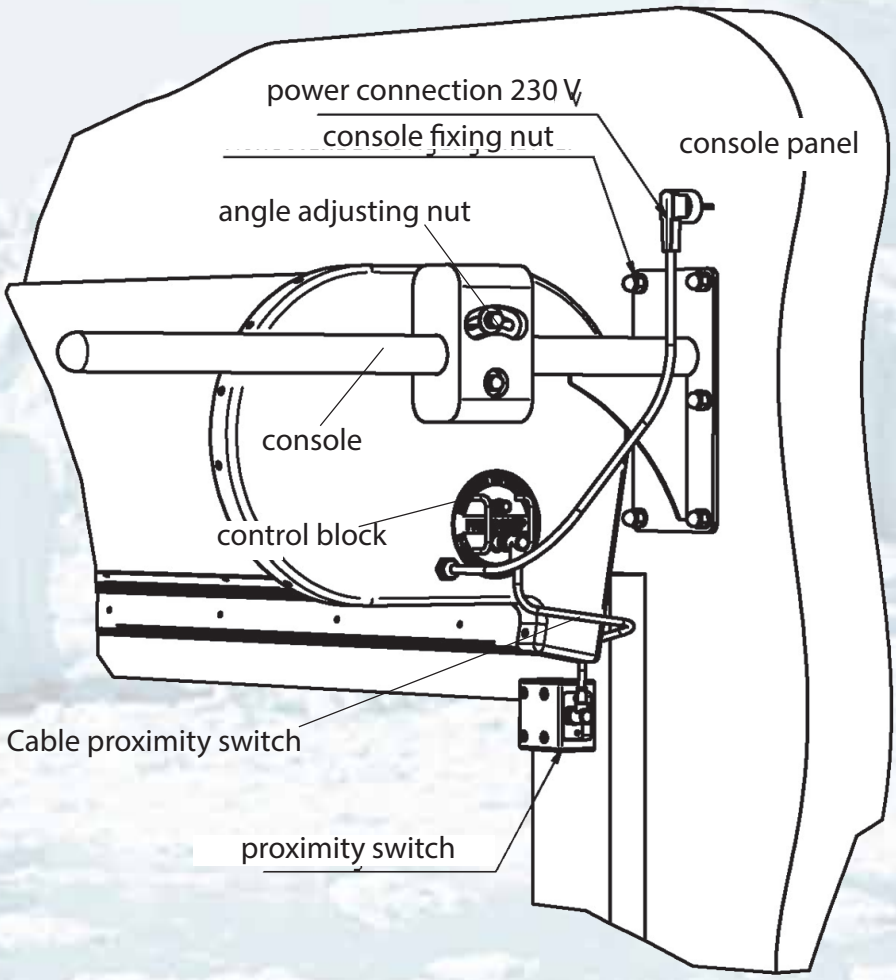

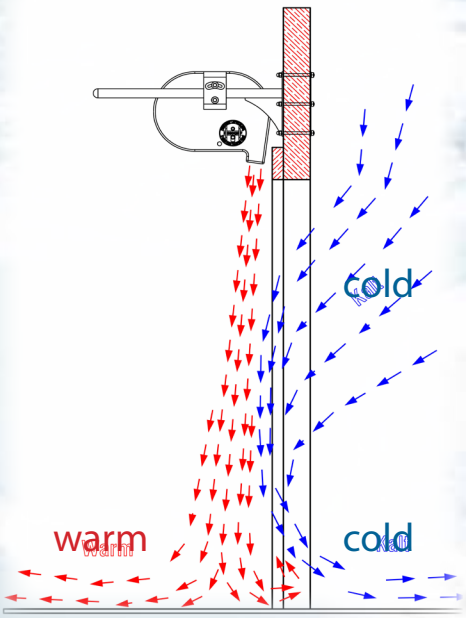

7. Very long durability, quiet, maintenance-free and reliable.

All air curtains are manufactured in a corrosion-resistant and noise-insulated design. The housing with the outlet nozzle are made out of a modern sandwich material with a core of plastic and a surface of painted aluminum. These materials have very good properties in terms of corrosion resistance, noise insulation and stability.

Type F, G, M and S : The wheels and the housings of the blowers are made out of galvanized steel.

Type A and B: The wheels are made out of fibre-reinforced polyamide and housings with the inlet nozzles are made of stainless steel.

The other parts of the air curtains, as well as all the screws and brackets, are made of stainless steel. All air curtains have the protection class IP 44 or IP54.

The assembly of the FRIGOVENT air curtain

Assembly

The air curtain is mounted with two consoles above the door opening. The electric current connection is 230 Volts. The system must be protected at 16 A. Then the air curtain must be adjusted with the help of the air-flow indictor wheel.

The unit consists of:
- Nozzle with fans and control unit.
- Two stainless steel brackets.
- Watertight proximity switch with cable and connector.
- Fixings for clamp mounting onto a panel wall or alternatively fixing material for mounting onto ma sonry.
- Air-flow indicator wheel for function testing.

1. The air curtains must be mounted on the warm side of the door. The unit must be centrally mounted above the door opening.

2. The unit must be pushed onto the consoles with the blowers towards the door.

3. The proximity sensor turns the system on whenever the door moves away from the switch. The sensor must be placed so that the blowers of the air curtain start to run whenever the door moves to the open position.

4. The nozzle must be adjusted so that the air flow meets the floor in front of the door at an angle of 5 to 10 degrees.

5. The air flow is to be set using the potentiometer so that it just reaches the ground.
The air velocity has to be kept low, because otherwise the air-flow mixes with the coldroom air and mist may occure.

6. The FRIGOVENT air curtain is optimally adjusted when no out side air enters and when no cold air escapes.
To check this, the air-flow indicator wheel must be set in front of the threshold of the door directly under the airflow of the air curtain.
When the system is switched off, you can see how the impeller of the air-flow indicator wheel turns, being moved by the escaping cold air.
If you switch on the air curtain and turn up the potentiometer you can see the impeller rotating more slowly until it finally stops. When the impeller stops, the nozzle and the air velocity are correctly adjusted.

7. Do not install air curtains in combination with strip curtains or swing doors.

8. The nozzle of the air curtain should be about 10% wider than the door opening.

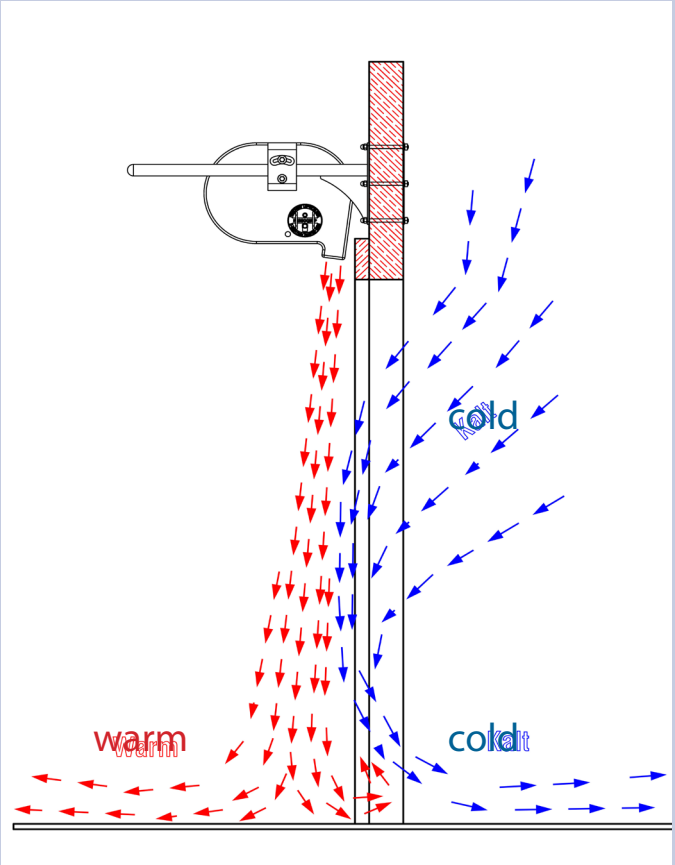

Function and regulation of the air volume

How does an air curtain?

An air curtain system is a device that prevents an exchange of air through a wall opening, without any physical barrier.

There is an air curtain blower with an air collection box and a discharge nozzle. A door out of moving air. The air curtains are equipped with a particular air rectifier in the outlet nozzle. This air rectifier consists of hundreds of small blowpipes.
The air flow generated by the radial fans is directed through the blow pipe rectifier.
It is completely laminar, homogeneous and free of turbulence.
The beam is narrow and extends far. This jet of air is blown at right angles to the inflowing air. The air jet must be so strong that it reaches to the floor and tears the incoming or adjacent air with it.

The blown air forms a core beam. The entrained air forms on each side of the core beam a sub-beam.

The central stream and the secondary beams hit the ground and divide, so that the air volumes of the core jet and the entrained air quantity of the secondary beams will stay where they came from.
The air volumes of the inner side beam remain inside and the air volume of the outer side beam outside.
The air volumes of the core beam remain within the range in which they were drawn.

It is important that the core beam is laminar and turbulence-free.
Then the air of the secondary beams can not mix with the core jet.

Thus, the entrained air volumes in the secondary beams of each other remain separate and the air curtain can be as fully effective.
The neighboring air volumes, air currents or the greater weight of the air, for example, with cold air (air of a freezing chamber is up to 20% heavier than normal air) can push aside the air jet of the system.
To correct this, the blow-off nozzle is pivotable so that the discharge angle of the air jet can be pivoted up to 15 ° to both sides.

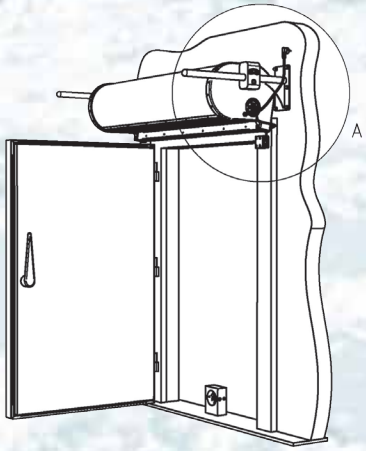

How is the optimal amount of air controlled?

In the corporate sign on the right cap of the plant is the plug adapter for the hand switch or for the proximity switch and the rotary knob to control the air volume and air velocity.
The knob is secured on some models, so you can adjust it using only a screwdriver. By turning the knob you can adjust the air speed continuously.

The amount of air flows at a speed of about 15 m / sec from the nozzle.
The speed slows down the more the air flow approaches the ground .
If the air speed is too low, the air flow does not reach the ground.
If the air speed is too high, it collides heavily on the ground, which leads to disturbing turbulence.
The air flow must be regulated so that it extends to the ground.
The supplied windmill is placed directly under the air flow.
When air curtain is switched off, the wind turbine rotates.
In cold storage doors it is powered by the escape of cold air and at operating doors by cold airflowing into.
If you turn on the system and increase the air speed, you will see that the wind turbine will slow down and eventually stop If the wind turbine stands, it is guaranteed that it is also in the weakest area of the air flow - namely, on the ground - there will be no more air exchange.

Is the discharge nozzle set correctly ?

How can you see, that the discharge angle of the air flow is adjusted correctly?

If the discharge angle of the system is set incorrectly, the air is blown into the room, which needs to be sealed, or will be drawn from this space.
As a result, the air pressure changes in the room.

At short intervals there are pressure equalizations in the weakest area of the air curtains that is just above the ground.
You can observe this well, because in this case the windmill alternately turns at short intervals - right and left.
The wind turbine does not reach the rest position.
It changes its direction of rotation with the always alternately for pressure equalization flowing air.
To set the system optimally, the discharge angle must be changed until the Windturbine reaches the rest position.

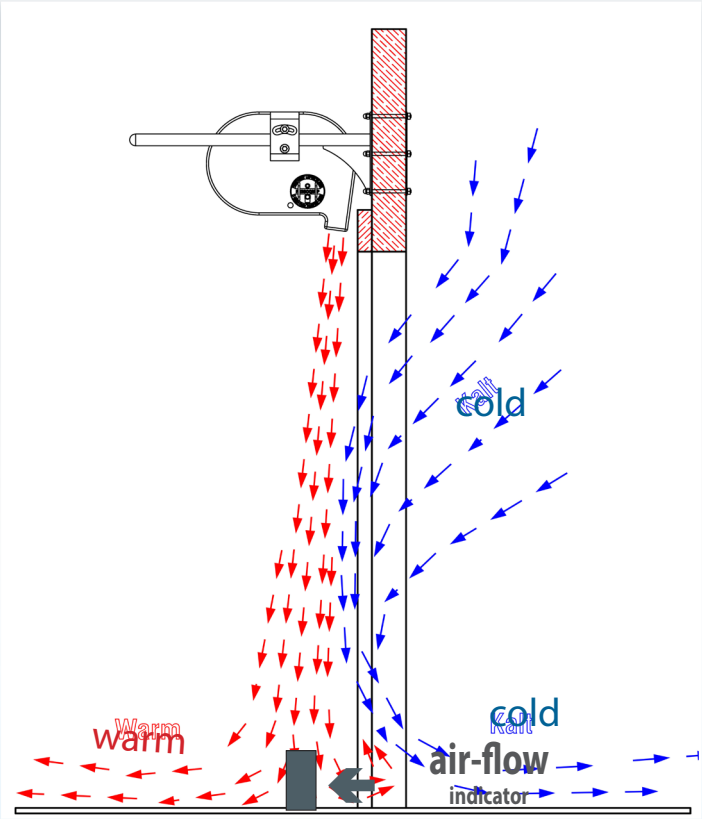

CORRECT
The impeller of the indicator does not move.
The air velocity and the discharge angle are optimal. Cold air cannot escape. Warm air cannot enter the coldroom.

How to set the angle of the discharge correctly

How can you adjust the correct discharge angle of the air stream?

The central stream of the air curtain system widens the further it approaches the ground.

To prevent that the core stream blows into the sealed door opening, the outlet nozzle is pivotable.

In the normal position, the outlet nozzle is so positioned that it is blown at an angle of 7.5 ° to the outside.
If this angle is insufficient, the system may be swung.
For this, the air curtain system is pivotally stored in the consoles.
By carefully loosening a cap nut in the connection pads on the two end caps the system can be moved so that the discharge nozzle can be infinitely rotated by approximately 15 ° to the inside or outside.

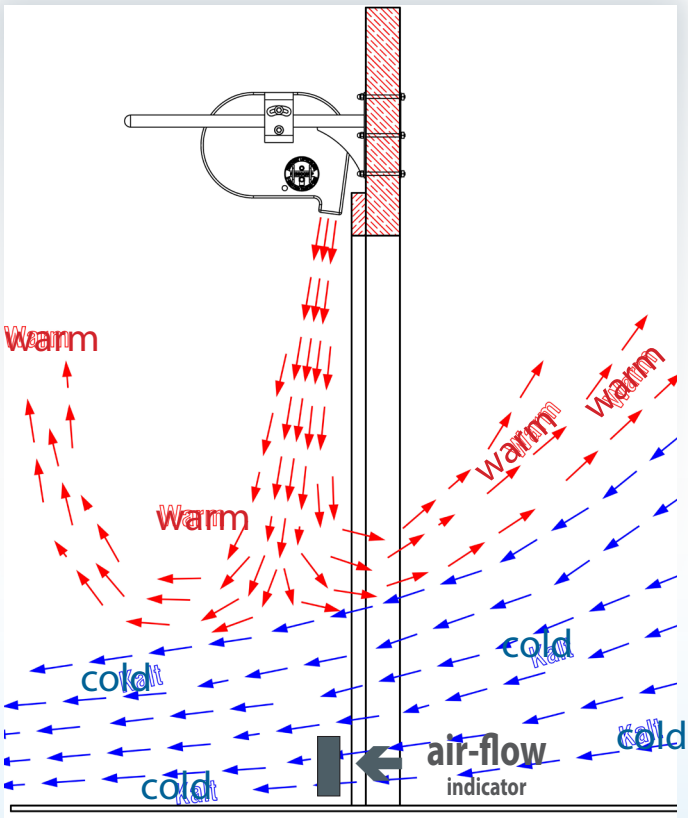

WRONG
The air velocity is too low.
The airflow does not reach the ground.
Cold air flows out.
Air velocity has to be increased!

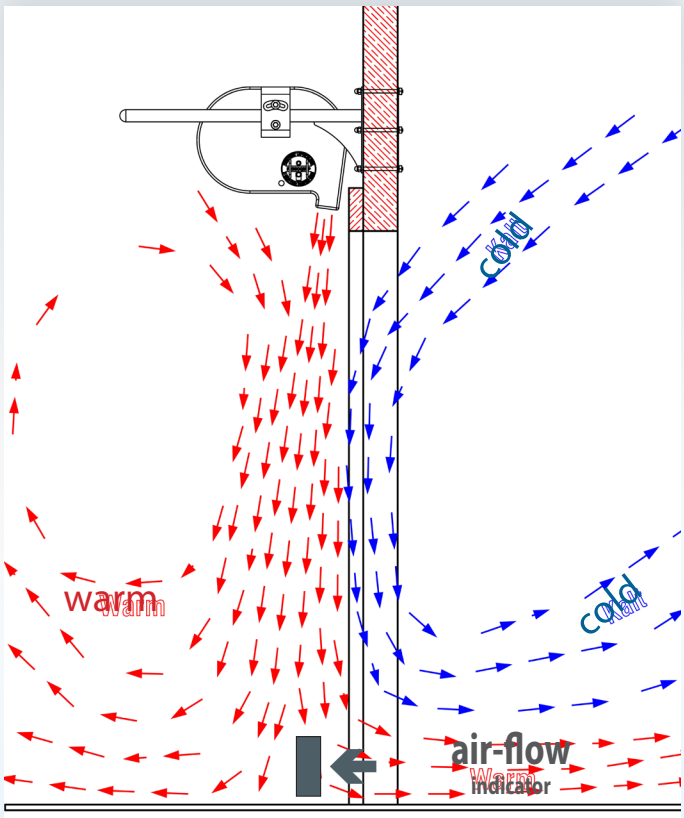

WRONG
The air velocity is too high.
Ineffective and disruptive air turbulences are incuring.
Reduce air velocity!

Assembly

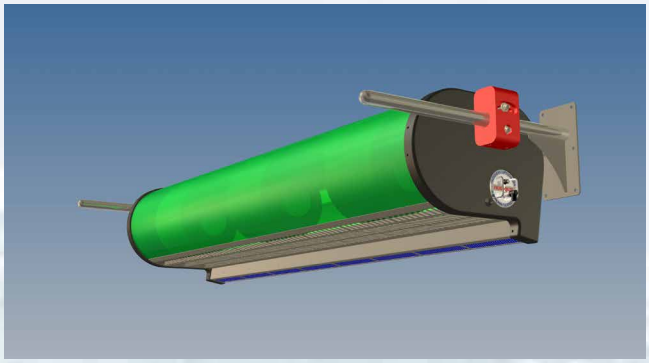

Rear wall assembly
Normal construction width

The FRIGOVENT will be mounted with two stainless steel panels with solid polyamide blocks on the warm side of the wall above the door opening.
This is the normal type of installation.

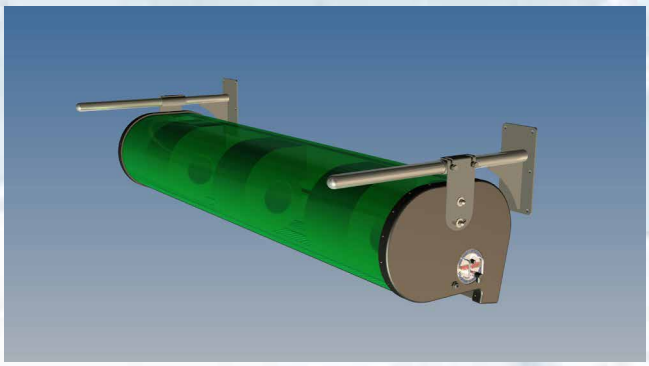

Rear wall assembly
Reduction of the construction width

The FRIGOVENT will be mounted with two stainless steel brackets on the wall above the door opening.
These consoles take up less space in the construction width - but need more space in the height.

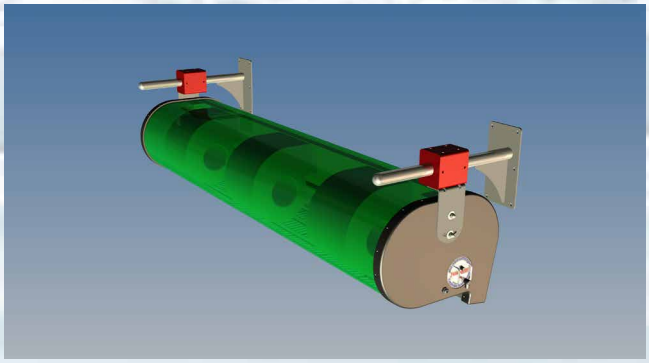

Rear wall assembly
Variable console distance

The FRIGOVENT is mounted with two stainless steel brackets with solid polyamide blocks on the warm side of the wall above the door opening.
If you can not mount the brackets in the right distance, it can be corrected by shifting the angle brackets below the polyamide blocks.

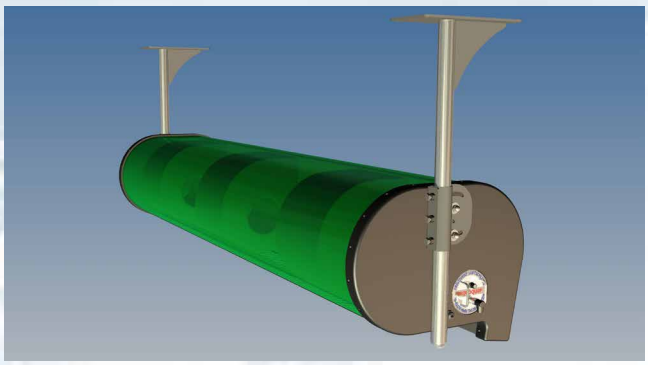

Ceiling mounting
Mounting under the ceiling

The FRIGOVENT will be mounted with two stainless steel brackets under the ceiling above the door opening.

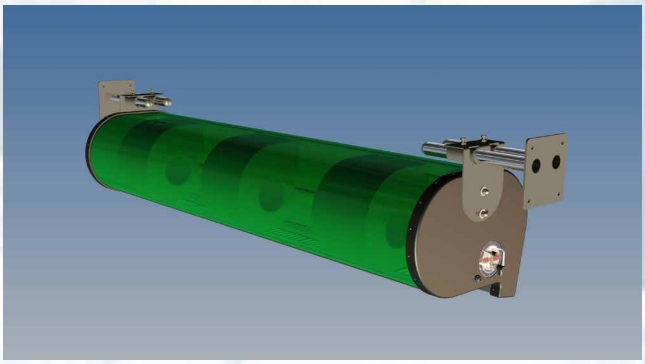

Side mounting
Mounting on the side walls

The FRIGOVENT will be mounted with two stainless steel panels with polyamide solid plates on the side walls and in front of the door opening.
This type of installation is often used in corridors that are sealed off by air curtains against cold air loss.

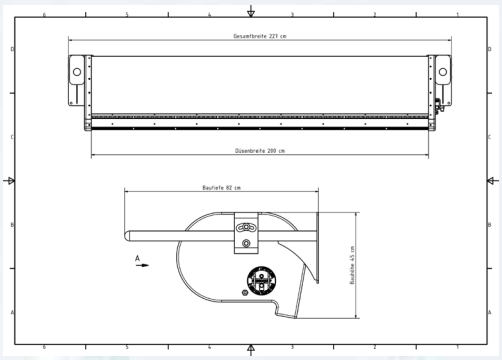
Gesamtbreite 227 cm
Düsenbreite 200 cm
Baulänge 82 cm
A
Bauhöhe 65 cm

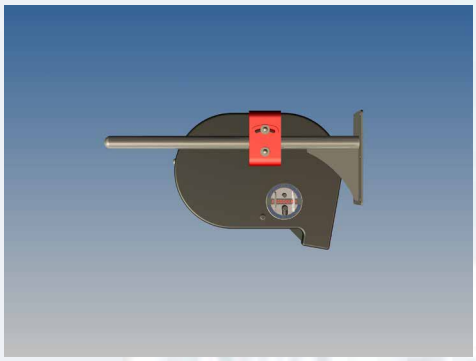

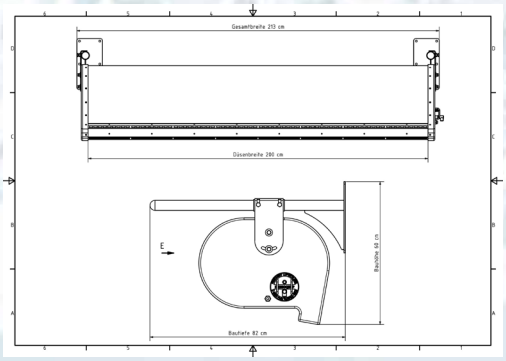
Gesamtbreite 203 cm
Düsenbreite 200 cm
E
Bauhöhe 62 cm
Baulänge 82 cm

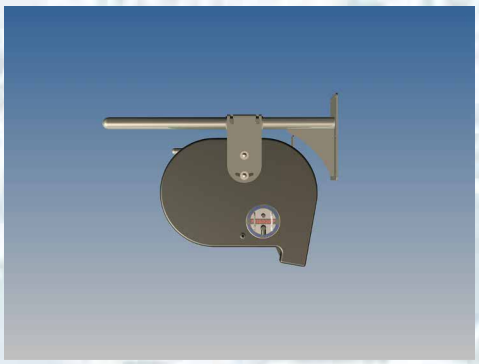

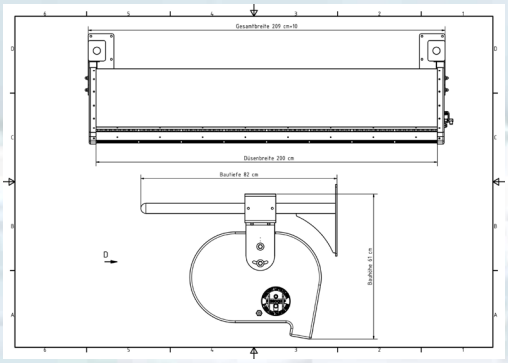
Gesamtbreite 209 cm+10
Düsenbreite 200 cm
Baulänge 82 cm
D
Bauhöhe 61 cm

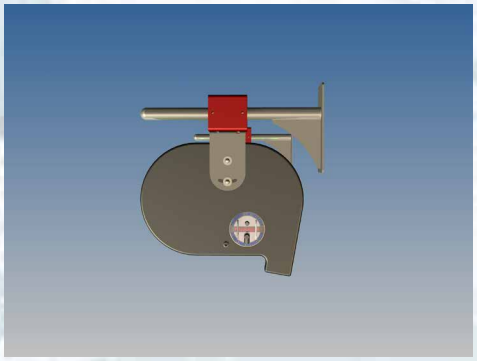

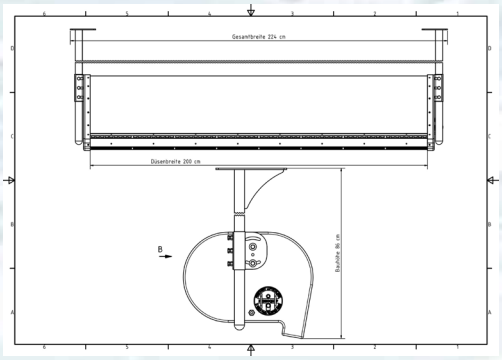
Gesamtbreite 224 cm
Düsenbreite 200 cm
B
Bauhöhe 86 cm

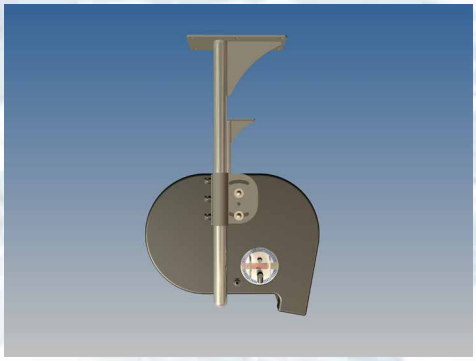

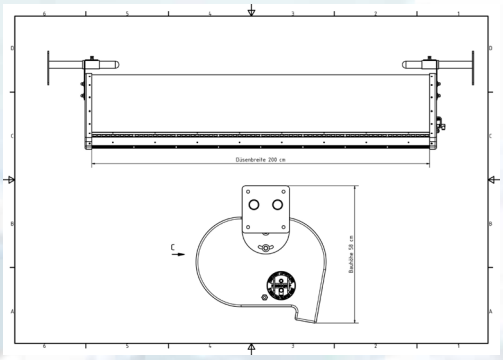
Düsenbreite 200 cm
C
Bauhöhe 56 cm

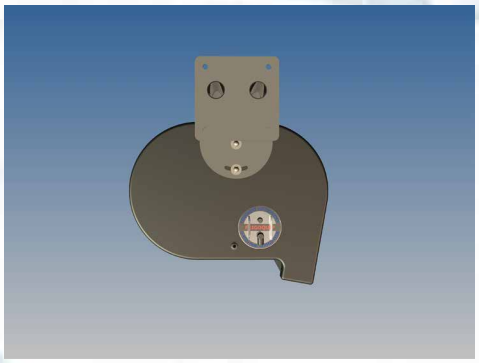

Technical Data

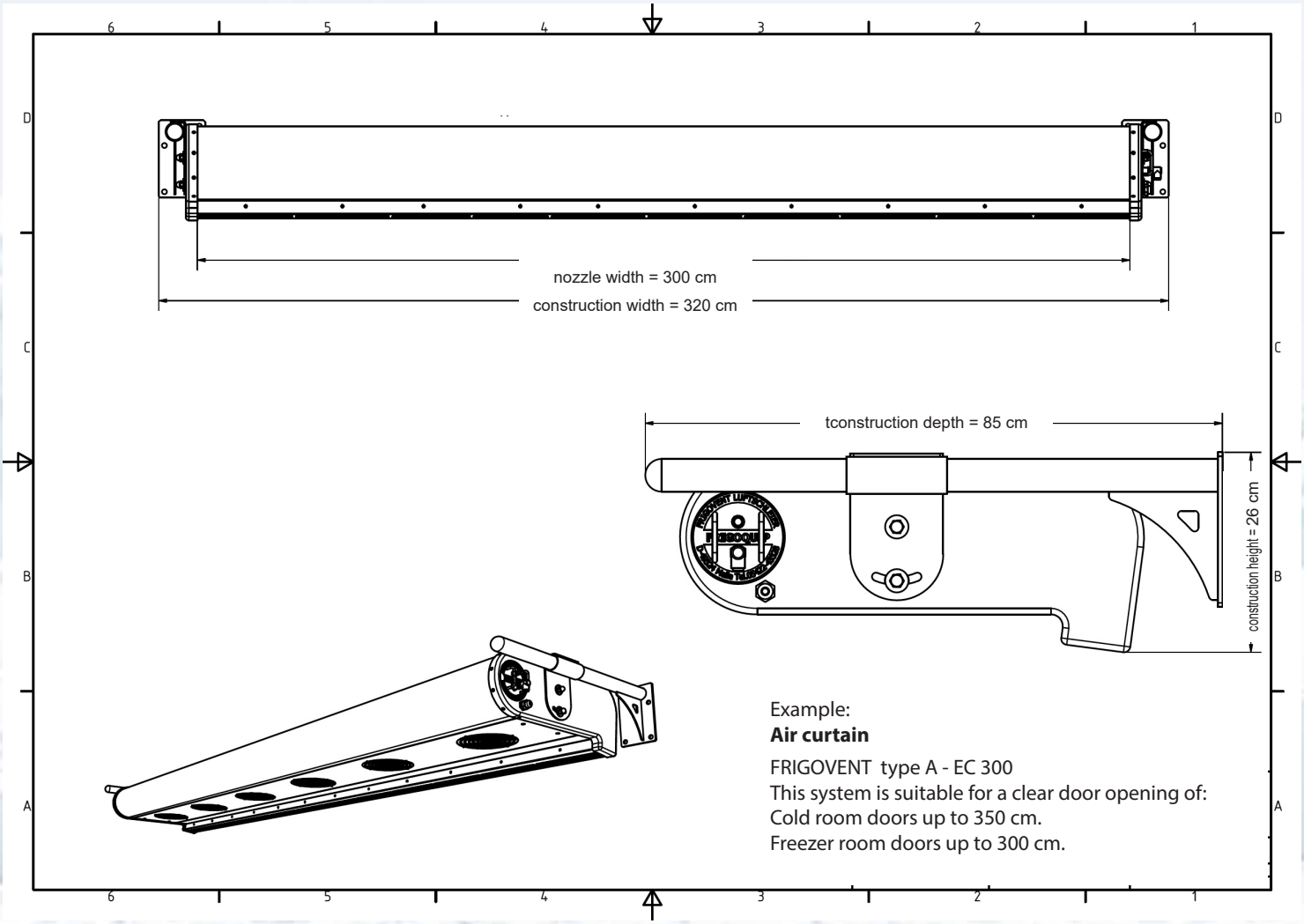

Example:
Air curtain

FRIGOVENT type A - EC 300
This system is suitable for a clear door opening of:
Cold room doors up to 350 cm.
Freezer room doors up to 300 cm.

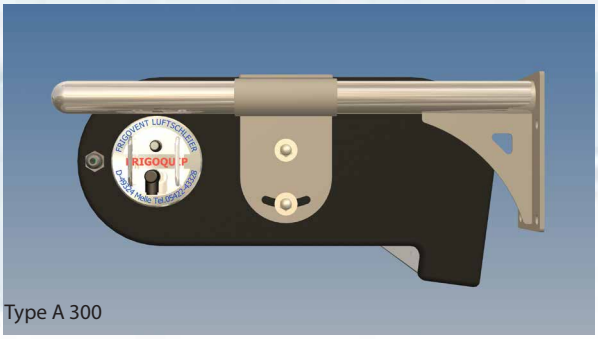
Type A 300

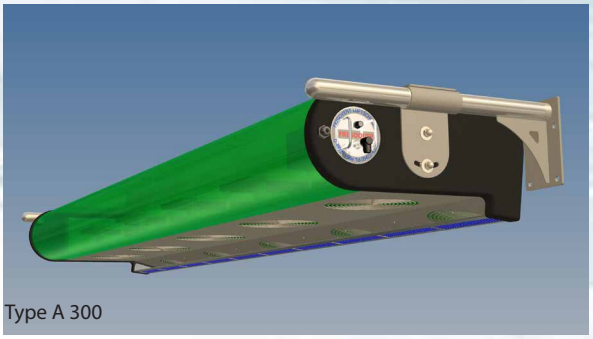
Type A 300

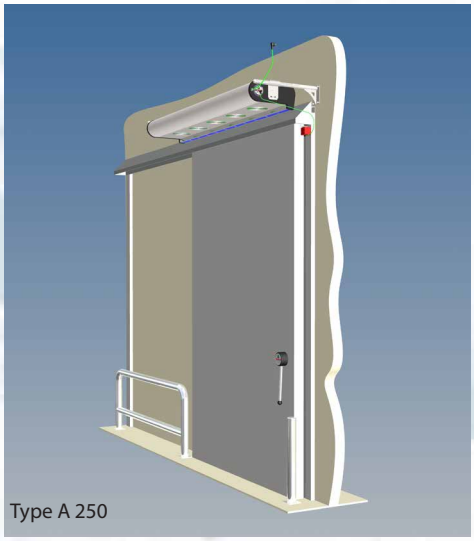
Type A 250

FRIGOVENT air curtains Type A and B are suitable for door widths up to 600 cm. and for door heights up to 350 cm. Very low overall hight - 26 cm. Especially corrosion resistant housing and blowers. Protecting class IP 54.

Execution
The units are delivered complete and ready to use. A cantilevered housing with fans, outlet nozzle, consoles and electronics rack - mounted fully functional. The housing consists of a soundproof aluminum plastic composite material. Colour white. Alternatively, we can produce a stainless steel housings. The blowers are equipped with electronically commutated energy-efficient EC motors. The housings of the blowers and all remaining components of the air curtain consist largely of stainless steel. Suitable for use in humid enviroments - Protecting class IP 54.

Scope of delivery
FRIGOVENT air curtain, two stainless steel brackets, stable windmill as an adjustment and proximity sensor with cable and screws. Stainless steel hardware for mounting on a panel wall or alternatively material to fasten at masonry.

Assembly
The air curtain can be installed by trained workers. We have several installation teams and install air curtains around the world.

FRIGOQUIP air curtain technology

Technical data FRIGOVENT Type A and Type B

TYPE Width of outlet nozzle cm	Blowers pieces A	Blowers pieces B	Weight FRIGOVENT Type A / FRIGOVENT Type B 10% more weight: with packing kg	without packing kg	FRIGOVENT Type A suitable for following door hights indoor gates up to 300 cm outdoor gates up to 250 cm depending of wind Blowers with electronically commutated motors Voltage 230/1N~/50-60: air power m³/h	nominal adsorption KW	FRIGOVENT Type B suitable for following door hights indoor gates up to 350 cm outdoor gates up to 300 cm depending of wind Blowers with electronically commutated motors Voltage 230/1N~/50-60: air power m³/h	nominal adsorption KW
FRIGOVENT					**Type A**		**Type B**	
75	1	2	54	34	**1.000**	0,15	**2.000**	0,30
100	2	3	66	43	**2.000**	0,30	**3.000**	0,45
125	2	3	79	53	**2.000**	0,30	**3.000**	0,45
150	3	4	93	64	**3.000**	0,45	**4.000**	0,60
175	3	5	109	76	**3.000**	0,45	**5.000**	0,75
200	4	6	121	85	**4.000**	0,60	**6.000**	0,90
225	4	6	136	97	**4.000**	0,60	**6.000**	0,90
250	5	7	150	108	**5.000**	0,75	**7.000**	1,05
275	5	8	164	119	**5.000**	0,75	**8.000**	1,20
300	6	9	178	130	**6.000**	0,90	**9.000**	1,35
325	6	9	189	138	**6.000**	0,90	**9.000**	1,35
350	7	10	203	149	**7.000**	1,05	**10.000**	1,50
375	7	11	221	163	**7.000**	1,05	**11.000**	1,65
400	8	12	231	170	**8.000**	1,20	**12.000**	1,80
425	8	12	246	182	**8.000**	1,20	**12.000**	1,80
450	9	13	260	193	**9.000**	1,35	**13.000**	1,95
475	9	14	274	204	**9.000**	1,35	**14.000**	2,10
500	10	15	288	215	**10.000**	1,50	**15.000**	2,25
525	10	15	302	226	**10.000**	1,50	**15.000**	2,25
550	11	16	315	236	**11.000**	1,65	**16.000**	2,40
575	11	17	331	248	**11.000**	1,65	**17.000**	2,55
600	12	18	346	260	**12.000**	1,80	**18.000**	2,70

OPTIONAL

All air curtains Type A and B also available for 110 V and for 60 Hz as well as 50 Hz.

Off and on switch with control lamp instead of proximity switch - for continuous operation of the air curtain.

Special consoles - Reduction of the width - Installation under the ceiling - Fixing to the side walls.

Side windscreen from soft PVC strips to avoid lateral warm air intake.

Separate control box with speed controller and off and on switch instead of control box in the device.

DUPLEX Execution - two air curtains for one door - one curtain outside over the door - one curtain insde. For better performance.

Housing made of stainless steel surface matt finish..

Technical data

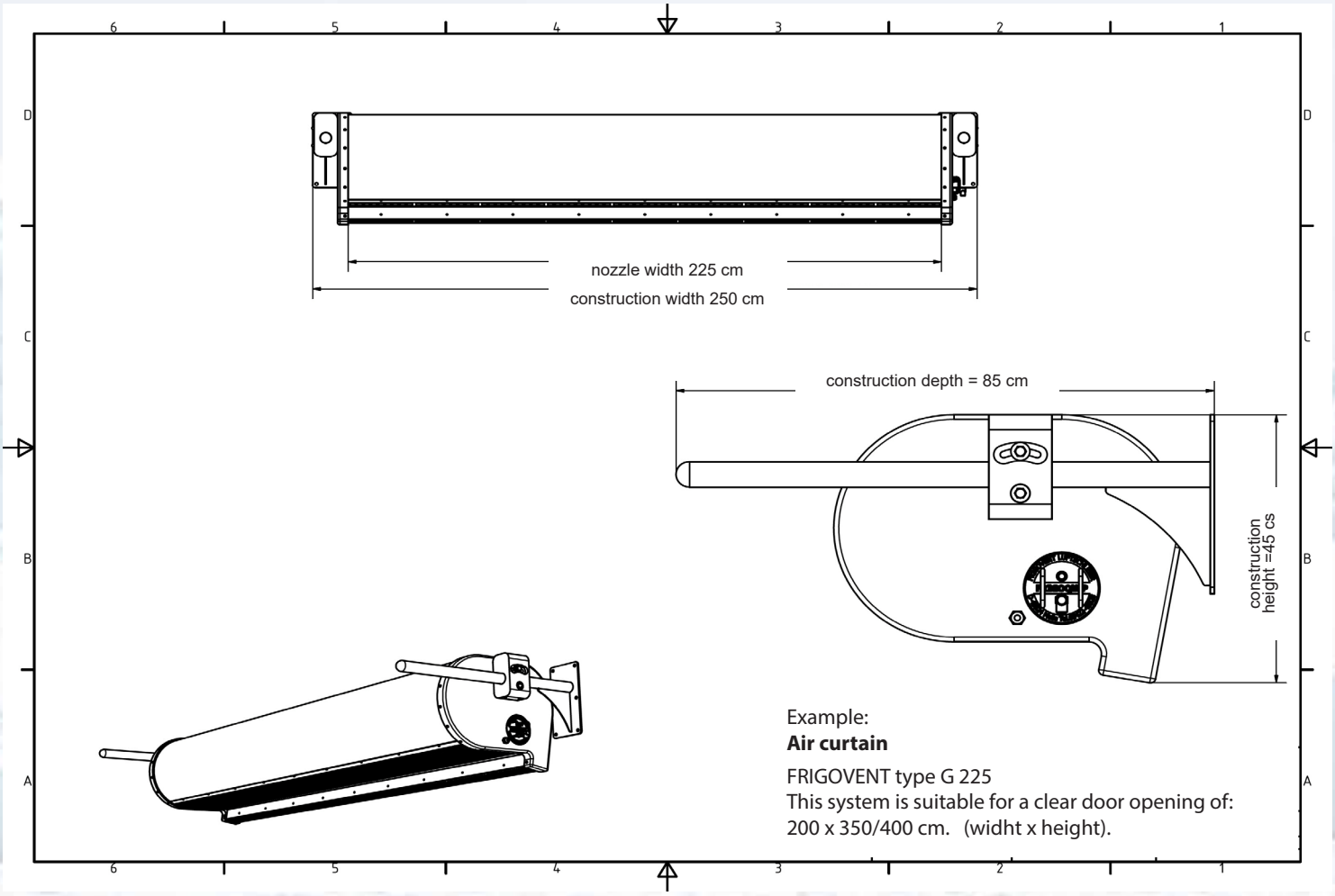

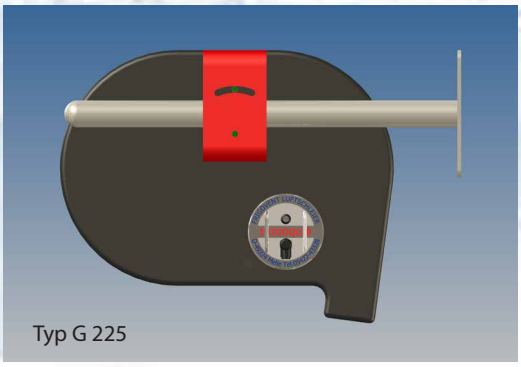
Typ G 225

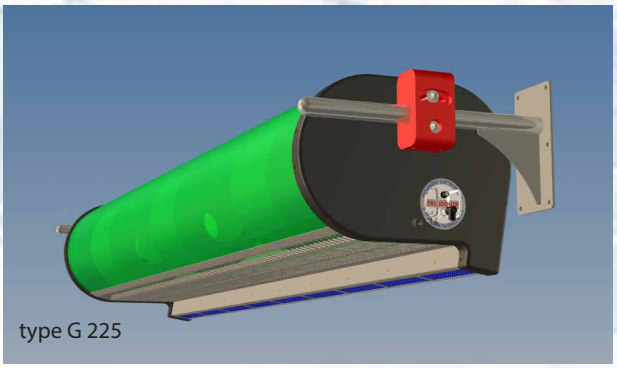
type G 225

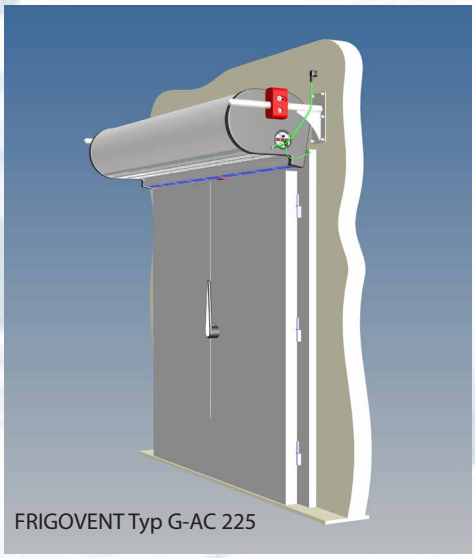
FRIGOVENT Typ G-AC 225

FRIGOVENT type F and G for doors with a width up to 600 cm and for doors with a height up to max. 400 cm.

Execution

The systems are delivered complete and ready to use. A cantilevered housing with fans, outlet nozzle, consoles and electronics rack - mounted fully functional.
The housing consists of a soundproof aluminum plastic composite material. Colour white. Alternatively, we can make a stainless steel housing.
The blowers are optionally equipped with electronically commutated energy-efficient EC motors or with normal AC motors.
The remaining components of the system consist largely of stainless steel.

Scope of delivery

FRIGOVENT air curtain system, two stainless steel brackets, stable wind turbine as an adjustment and proximity sensor with cable and screw. Stainless steel mounting hardware for mounting on a panel wall or alternatively material to fasten at masonry.

Assembly

The air curtain can be installed by trained workers. We have several installation teams and install air curtains around the world.

FRIGOQUIP
air curtain technology

Technical Data FRIGOVENT Type F and Type G

TYPE nozzle width cm	Blowers pieces	Weight FRIGOVENT Type F FRIGOVENT Type G They are 10% heavier packing with kg	without kg	FRIGOVENT Type F-AC with AC-radial blowers suitable for a clear door opening of Indoor doors up to 300 cm Outdoor doors up to 250 cm depending from windload Voltage 230/1N~/50 air power m^3/h	nominal adsorption KW	FRIGOVENT Type G-AC with AC-radiall blowers suitable for a clear door opening of Indoor doors up to 400 cm Outdoor doors up to 350 cm depending from windload Voltage 400/3N~/50 air power m^3/h	nomial adsorption KW
FRIGOVENT				**Type F-AC**		**Type G-AC**	
75	1	49	29	**1.000**	0,25	**2.000**	0,45
100	1	55	32	**1.000**	0,25	**2.000**	0,45
125	2	66	40	**2.000**	0,50	**4.000**	0,90
150	2	72	43	**2.000**	0,50	**4.000**	0,90
175	3	83	51	**3.000**	0,75	**6.000**	1,35
200	3	89	54	**3.000**	0,75	**6.000**	1,35
225	3	95	57	**3.000**	0,75	**6.000**	1,35
250	4	106	65	**4.000**	1,00	**8.000**	1,80
275	4	112	68	**4.000**	1,00	**8.000**	1,80
300	5	123	76	**5.000**	1,25	**10.000**	2,25
325	5	129	79	**5.000**	1,25	**10.000**	2,25
350	5	134	81	**5.000**	1,25	**10.000**	2,25
375	6	145	89	**6.000**	1,50	**12.000**	2,70
400	6	151	92	**6.000**	1,50	**12.000**	2,70
425	7	162	100	**7.000**	1,75	**14.000**	3,15
450	7	168	103	**7.000**	1,75	**14.000**	3,15
475	7	174	106	**7.000**	1,75	**14.000**	3,15
500	8	185	114	**8.000**	2,00	**16.000**	3,60
525	8	191	117	**8.000**	2,00	**16.000**	3,60
550	9	202	125	**9.000**	2,25	**18.000**	4,05
575	9	208	128	**9.000**	2,25	**18.000**	4,05
600	9	214	131	**9.000**	2,25	**18.000**	4,05

OPTIONAL
With EC blowers with electronically commutated motors up to 30% lower power consumption
On and off switch with indicator lamp instead of proximity switch for permanent use of the air curtain
Special consoles for the reduction of the width, for mounting under the ceiling or at the side walls
Side windshield made from soft PVC plates to avoid lateral warm air intake.
Separate control box with speed controller and switch instead of switching in the device.
Housing made of stainless steel surface matt finish or circular graining, housing in a different color instead of white.

Technical data

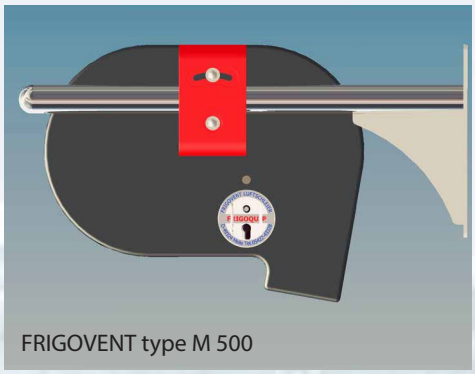
FRIGOVENT type M 500

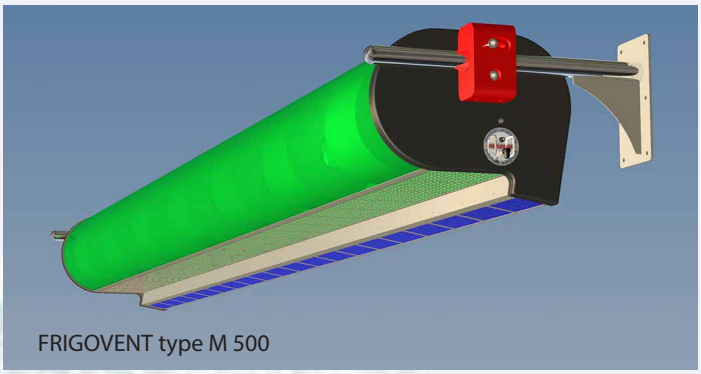
FRIGOVENT type M 500

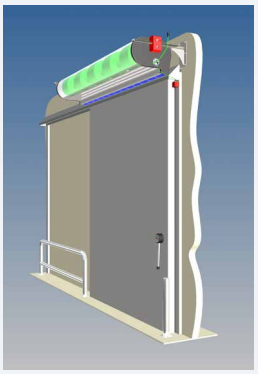

FRIGOVENT type M and S
for doors width up to 600 cm and
für a doors height up to max. 600 cm.

Execution
The air curtains are delivered complete and ready to use. A cantilevered housing with blowers, outlet nozzle, consoles and electronics rack - mounted fully functional.
The housing consists of a soundproof aluminum plastic composite material. Colour white.. Alternatively, we can produce stainless steel housings.
The blowers of the types M and S are optionally equipped with electronically commutated energy-efficient EC motors or with normal AC motors.

Air curtains with EC blowers are more expensive but EC blowers consume 30% less electricity

Therefore we recommend for doors which are open for long periods, air curtains with energy-saving EC fans. The remaining components of the air curtains consist largely of stainless steel.

Scope of delivery
FRIGOVENT air curtain, two stainless steel brackets, a windmill as a help to adjust the system and a proximity sensor with cable and screws. Stainless steel mounting hardware for mounting at a panel wall or alternatively material to fasten at masonry.

Assembly
The air curtain can be installed by trained workers. We have several installation teams and install air curtains around the world.

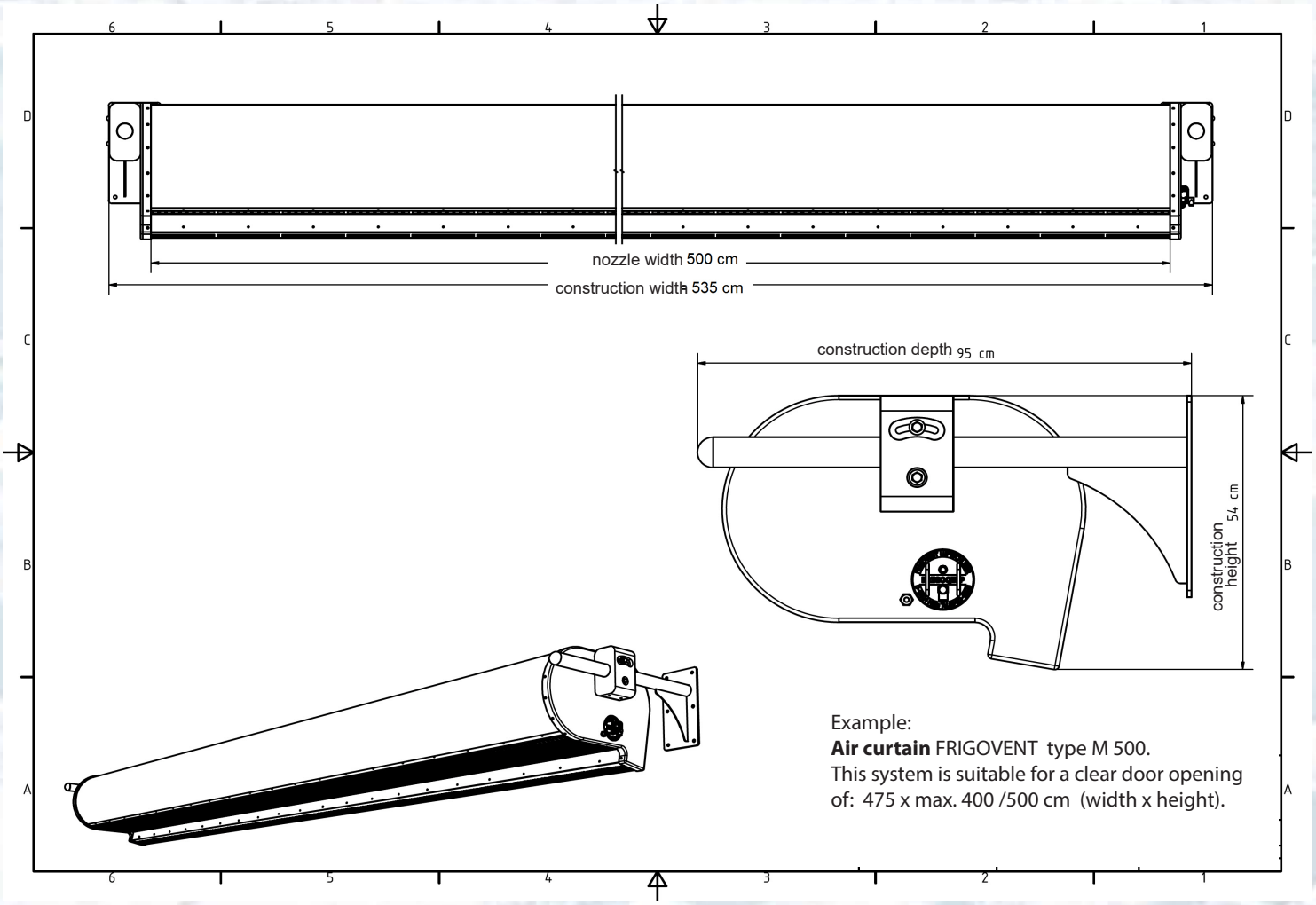

Example:
Air curtain FRIGOVENT type M 500.
This system is suitable for a clear door opening of: 475 x max. 400 /500 cm (width x height).

Technical data FRIGOVENT Type M and Type S

Type nozzle width cm	Blowers pieces	Weight FRIGOVENT Type M FRIGOVENT Typ S They are 10% heavier packing with kg	without kg	FRIGOVENT Type M-AC with AC-centrifugal blowers suitable for a clear door opening of Indoor doors up to 500cm Outdoor doors up to 400cm depending from windload Voltage 400/3N~/50-60 air power m^3/h	nominal adsorption KW	FRIGOVENT Type S-AC with AC-centrifugal blowers suitable for a clear door opening of Indoor doors up to 600cm Outdoor doors up to 500cm depending from windload Voltage 400/3N~/50-60. air power m^3/h	nominal adsorption KW
FRIGOVENT				**Type M-AC**		**Type S-AC**	
100	1	70	41	**3,000**	0,70	**4.000**	1,0
125	2	87	54	**6.000**	1,40	**8.000**	2,0
150	2	95	58	**6.000**	1,40	**8.000**	2,0
175	3	115	74	**9.000**	2,10	**12.000**	3,0
200	3	123	78	**9.000**	2,10	**12.000**	3,0
225	3	131	82	**9.000**	2,10	**12.000**	3,0
250	4	148	95	**12.000**	2,80	**16.000**	4,0
275	4	156	99	**12.000**	2,80	**16.000**	4,0
300	5	176	115	**15.000**	3,50	**20.000**	5,0
325	5	184	119	**15.000**	3,50	**20.000**	5,0
350	5	192	123	**15.000**	3,50	**20.000**	5,0
375	6	209	136	**18.000**	4,20	**24.000**	6,0
400	6	217	140	**18.000**	4,20	**24.000**	6,0
425	7	237	156	**21.000**	4,90	**24.000**	6,0
450	7	245	160	**21.000**	4,90	**28.000**	7,0
475	7	253	164	**21.000**	4,90	**28.000**	7,0
500	8	270	177	**24.000**	5,60	**32.000**	8,0
525	8	278	181	**24.000**	5,60	**32.000**	8,0
550	9	298	197	**27.000**	6,30	**36.000**	9,0
575	9	306	201	**27.000**	6,30	**36.000**	9,0
600	9	314	205	**27.000**	6,30	**36.000**	9,0

OPTIONAL
EC blowers with electronically commutated motors up to 30% lower power consumption.
On-off Switch with indicator lamp instead of proximity switch for permanent use of the air curtain
Special consoles for the reduction of the width, for mounting under the ceiling or at the side walls
Side windshield made out of soft PVC plates to avoid lateral warm air intake.
Separate control box with speed controller and switch instead of switching in the device.
Housing made of stainless steel surface matt finish or circular graining, housing in a different color instead of white.

FRIGOVENT type A-EC 225 above a passageway, measuring 200 x 250 cm.

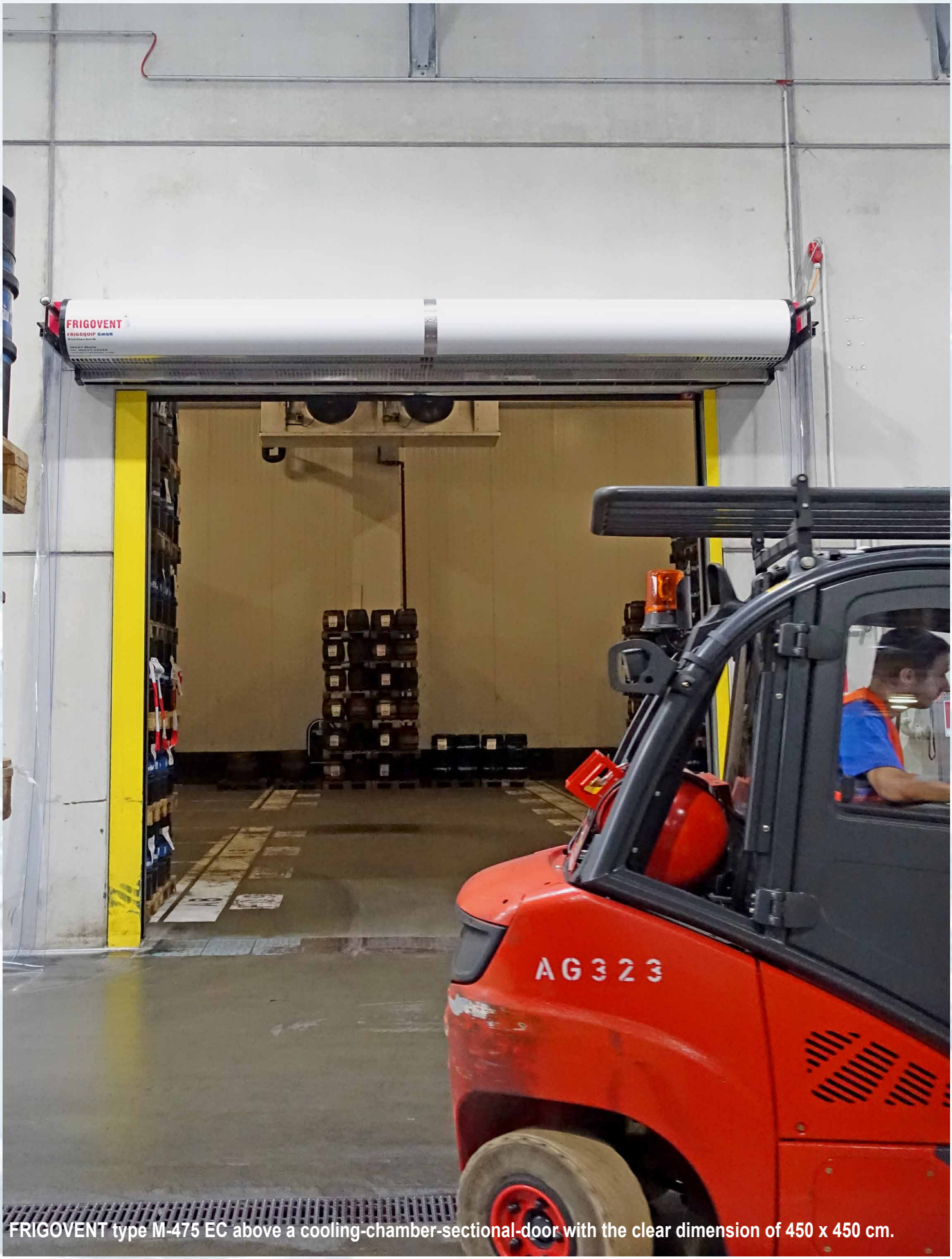

FRIGOVENT type M-475 EC above a cooling-chamber-sectional-door with the clear dimension of 450 x 450 cm.

FRIGOQUIP GmbH
Bakumer Str. 74
D-49324 Melle
GERMANY

FON 00495422-43328
FAX 00495422-43397
Email: info@frigovent.com
www. frigovent.com