THERMOVENT
air curtains

for factory doors and gates

SEPTEMBER 2018

FRIGOQUIP GmbH PB 1460 D-49324 Melle Phone 0049 5422 43328 Email: info@thermovent.eu www.thermovent.eu

Problems with open doors in production halls and warehouses.

Factory doors with traffic to the outside area cause high energy costs due to harmful air exchange. The heavy cold air of the outside flows to the inside at the bottom of the opened door.

At the same time the lighter warm and humid inside air leaves the warm store through the top of the door opening.

(fig 1.). This cold air needs to be heated again, thus extra energy is consumed for heating.

THERMOVENT air curtains solve these problems effectively.

The installation is above the door (fig 3.). Opening the factory door the THERMOVENT will automatically start.

The specially formed airflow protects the whole door opening.

Cold and warm air are effectively separated by an invisible air barrier (fig.2).
Cold air cannot penetrate, warm air cannot escape (fig 2.).

Advantages of air curtains.

Energy savings
Significant reduction in heating costs by avoiding warm air losses at open gates.

Smooth operation by unhindered transport of goods
Convenient and fast, the goods can be transported through the free door opening.
Swing doors and strip curtains are no longer necessary.

Accident prevention
See and be seen is made sure.
A dangerous free movement of goods through the air curtain is always guaranteed.
Unrestricted view.

Longevity
The air curtain system is located above the door and out of the transport area and cannot be damaged by fork lifts mechanically.

Hygienically safe
All hygiene requirements of the food industry are met. Contamination of the products - as we know it from swinging doors or strip curtains - is impossible.

Protection against insects.
No ingress of insects through doors, which are protected by air curtains. The inflow of dust and smoke is reliably prevented.

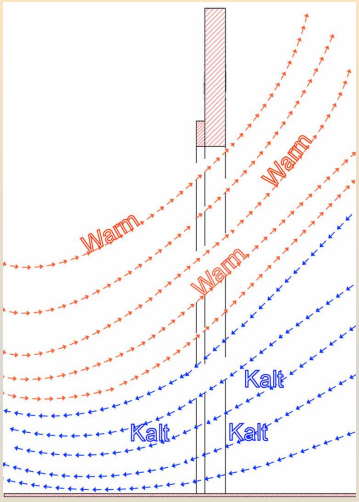

fig. 1.
If you open a door of a warehouse or factory gate, cold and heavy air from the outside penetrates at the lower part of the door opening. Warm air escapes to the outside at the upper part of the door.

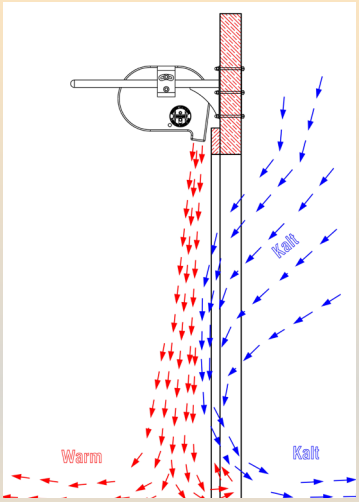

fig 2.
THERMOVENT air curtains create an unique air barrier, in order to avoid, that warm air escapes and cold air infiltrates in the building.

fig 3.
THERMOVENT air curtains can be installed at the inside or outside the building above the door. Preferably, the assembly will take place on the warm side - here in front of a sectional door. THERMOVENT air curtains are cantilevered up to 8 m. So the sectional door, which you see herecan move freely behind the air curtain.

THERMOVENT ... so that warm air remains in the hall even with open doors

1. Air curtain in cantilever construction for mounting on large gates
The housing of the air curtains can be mounted cantilevered over a distance up to 8 meters. The air curtain is placed on two brackets, which are mounted over to the door opening. On the brackets, the air curtains can be pushed in an optimal position uto the door opening.
So they are particulary suitable for extra-wide door openings with overhead doors, sliding gates and rolling doors.
These doors can move freely behind the air curtain system.

3. Even in continuous operation extremely low power consumption and quiet operation.
The blowers are optionally equipped with electronically commutated energy-efficient EC motors or with normal AC motors.
EC-motors are morde expensive, but the power consumption is about 30% less than those of AC-blowers. We recommend EC blowers for doors that are open long.
The EC motors are the result of a very complex development. These motors work with an extremely low power consumption. They are very simple and very suitable for continuous operation and characterized by a very low operating noise. When the speed of the EC- blowers is regulated down, the power consumption falls further analogous to the air speed.

4. High operating safety.
Whenever the door is opened, a proximity switch activates the air curtain just when the door is removed from the switch. So the fans are already powered up when the door is fully opened. This is a special switch. It is completely sealed without any moving parts. It is totally waterproofed and works with an operating current of only 12 volts. It is a security switch, which cannot cause any electrical accidents.

The special advantages of THERMOVENT air curtains

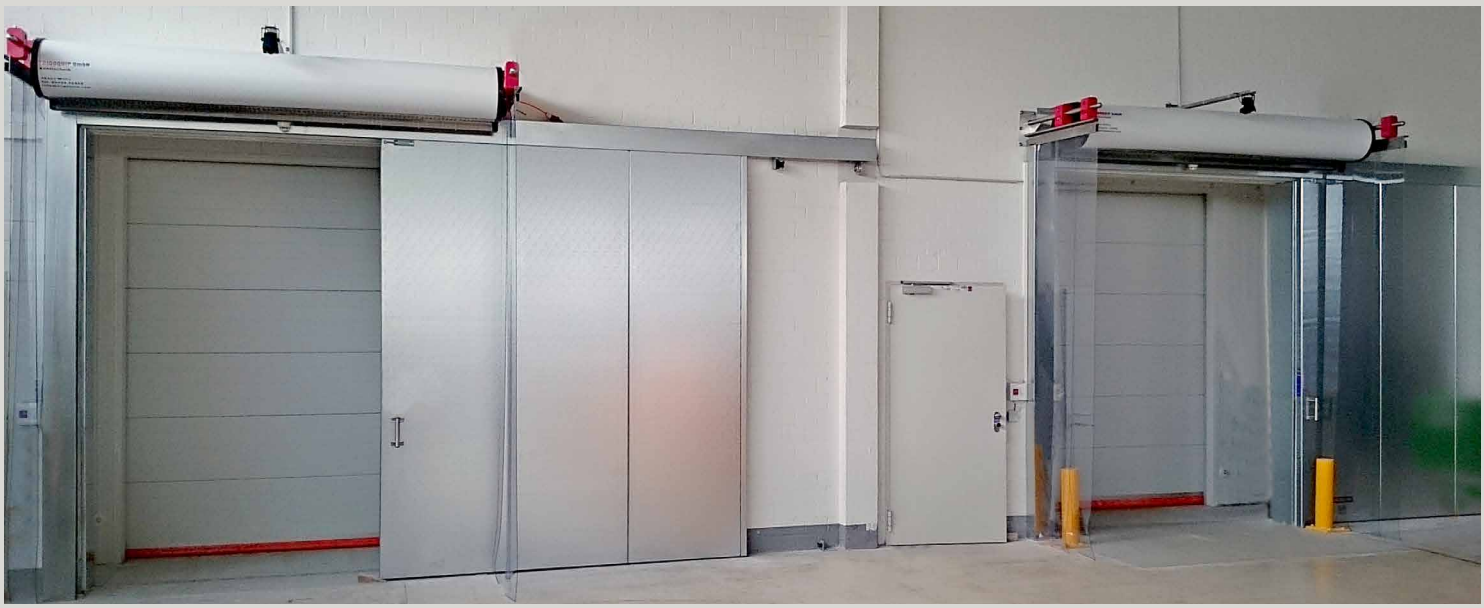

5. An optimum laminar flow of air separates the cold outdoor air from the warm indoor air.

THERMOVENT can be mounted on both sides of the door opening. We recommend mounting on the warm side of the wall. The blower sucks the warm air from the upper parts of the hall and blows it through the air nozzles and through the air rectifier to the ground. This airflow seperates the warm air, which will go out of the building and the cold air will enter. When the airflow hits the ground, it divides so that the warm air remains inside and the cold air remains outside.
The air flow is generated by radial blowers, compressed in the pressure chamber and then accelerated through a nozzle and distributed over the entire system width. At the nozzle outlet you can find an air rectifier made of hundreds small blowpipes. The air is blown through this. Thus, a special, laminar and turbulence-free air flow is generated, which does not mix with the entrained air.
If the air flow disturbs you in the door area, it can also be mounted on the cold outside of the wall above the door.
The air curtains are corrosion resistant and suitable for outdoor use.

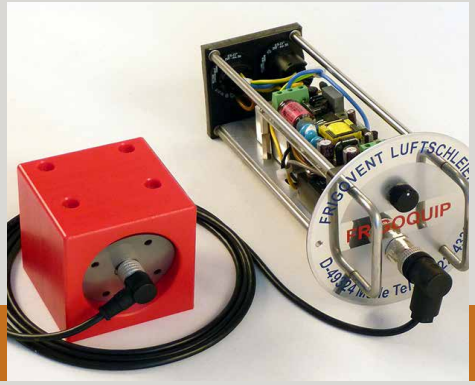

6. Fast and easy service

The air curtains are controlled electronically. There is a slide-in control with the electronics and all critical components, such as:

- The control of the fan speed.
- The circuit of the fan by contactless relays.
- The generation of the safety current - 12 Volt DC - for the proximity switch.
- The waterproof connector for this switch.

In case of failure, this slide-in control can be pulled by the operator and exchanged with a new one quickly. This eliminates time-consuming troubleshooting and allows a quick repair. So a global fast service is available.

7. Durable, quiet and reliable.

The air curtains are made corrosion-resistant and sound-insulated. The outlet nozzle and the housings consist of a modern sandwich, core material - plastic with painted aluminum surfaces.
The load-bearing parts of the curtains are made from solid plastic and of stainless steel. They are protected against moisture - protection class IP54.
In type A and B we use serially blowers with EC-motors the impellers consist of fiber reinforced plastic.and the housings of the blowers are made from stainless steel.
The blowers of the other models are made from galvanized steel. All the other parts are made from solid plastic or from stainless steel.

Function check by windmill

You can adjust the setting of the THERMOVET air curtain with the help of the provided windmill.
For adjustment of the air curtain the windmill must be placed on the threshold of the door.
The outflowing cold air lets the impeller rotate.
The air velocity and the discharge angle of the nozzle must be adjusted, so that the impeller rotates no longer or only slowly.
The stopped impeller of the windmill prooves that the air curtain system is set correctly.
Now you can absolutely be sure, that there is no disadvantageous air interchange anymore.

Function check and saving of energy

Saving of costs with THERMOVENT.

Warm air is up to 20% lighter than cold air.

It flows through the upper part of the door opening at a speed of about 1m/sec to the outside.

Cold air enters at the same time through the lower door area.

At a factory gate (5x5m clear opening) and an outside temperature of 0°C 12.5 m^3 warm air per second is flowing outside.

In two minutes, there is a loss of 1,500 m^3.

The same amount of cold air 1,500m^3 is flowing in at the same time and must be energyintensive reheated.

1 liter of oil is required to heat this cold air from 0° C up to 20° C.

This is the formula for the calculation of the energy required for heating air:

Q = m x c dt
Q = energy MJ
m = mass of air 1.239 Kg / m^3
x = Airflow m^3
c = constant heat of the air 1005
dt = 20 ° C temperature difference
39 MJ = 1.293 x 1500 X 1.005 X 20
35 MJ = 1 ltr. heating oil

One door opening, described above, costs at an unprotected gate in winter about 1 euro. - In the summer of 0.5 euro.

With daily 25 door openings, the cost of warm air losses amount to about € 5,000 per year.

80-90% of the hot air leakage can be prevented by the use of THERMOVENT air curtains.

High-quality components

Slide-in electronic
The slide-in electronic with mains filter prevents reliable power disturbances in the power grid. The THERMOVENT air curtain is activated automatically when door operation on and off.
This is ensured by a waterproof proximity switch 24 volts DC, which is equipped with a watertigth screw contact for the connection with the socket electronics. Wear-free switching operations are guaranteed by non-contact power relays. The variable adjustment of THERMOVENT-air volume and speed ensures an electronic controller.

Housing
Composite material. Both sides lacquered aluminum with a core made of solid polyethylene. Standard white oaluminum surface. Housing of stainless steel on request.

Blowers
Ball bearing energy saving blowers with electronically commutated DC motors made in Germany. The fans are quiet, easy to control, have an extremely low power consumption and a very long lifespan.

Consoles for mounting
Stabile consoles of stainless steel to mount the system above the door. Frigoquip offers consoles for fixing at brickwork or consoles with a clamping plate for fixing at walls made out of sandwich panels. The air curtains up to a length of 8 meter are cantilevered.
They can be mounted without suspension.
So the THERMOVENT air curtains are particularly suitable for installation above sectional doors, sliding doors and large hinged doors.

Air rectifier
The air rectifier in the outlet nozzle smoothes the airflow and makes it tighter and more efficient.
In the pressure chamber of the outlet nozzle the air becomes compressed, so that it is uniformly distributed over the entire discharge nozzle.
Behind the pressure chamber the air stream passes hundreds of small blowpipes.
They rectify the air stream and eliminate all air turbulences.
The result is a homogeneous, turbulence-free air curtain with increased penetration and a stable flow. In this way a particularly effective functioning is guaranteed.

THERMOVENT - mature technology down to the last detail *Made in Germany*

www.thermovent.eu

HORIZONTAL BLOWING AIR CURTAINS.

All our air curtains can also be supplied in a horizontal blowing version.
These are the same air curtains as offered in this catalog.

They are additionally installed in one self-supporting housing made of stainless steel pipes. They can be swiveled in the housing, so that they can be easily adjusted optimally.
The electronic control unit is also located at the top of the housing so that the air curtain is ready to plug in.

In the case of wider gates, two units are installed on the opposite sides of the doorway.
In the case of narrower gates, only one system is located on one side of the gate and blows against a baffle plate.

The stainless steel pipes are used to protect against mechanical damage, as the installations are - in contrast to the normal installation above the gate - in this position endangered by forklift-accidents.

MOUNTING

The THERMOVENT is preferably mounted inside above the door opening.
An internal arrangement provides the advantage that warm air is sucked from the upper part of the hall and then blown down.
Thus, the useless heat of the upper space region is used to heat the lower part of the hall.
Outdoor installation may be necessary for reasons of space.
It is also possible to mount two systems laterally of the door opening - one air curtain inside and one air curtain outside.
This is the best way to protect a door opening.

The unit consists of:
- Nozzle with fans and control unit.
- Two stainless steel brackets.
- Watertight proximity switch with cable and connector.
- Fixings for clamp mounting at a panel wall or alternatively fixing material for mounting at masonry.
- Windmill for functional testing.

1. Preferably mounting the system centrally the door opening by the two consoles.
2. The unit must be pushed on the consoles with the blowers towards the door.
3. The proximity sensor turns the system on, when the door moves away from the switch. The sensor must be placed so, that the blowers of the air curtain start to run, when the door moves to open.
4. The nozzle must be adjusted so that the air flow meets the floor in front of the door at an angle of 5 to 10 degrees.
5. The air flow is to be set with the potentiometer so that it just reaches the ground. The speed of the air flow should be kept relativ low.
6. The THERMOVENT air curtain is optimally adjusted, when no outside air enters and when no warm air escapes.
   To check this, the windmill must be set in front of the threshold of the door directly under the air flow of the air curtain. When the system is switched off, you can see how the impeller of the windmill is turning moved by the inflowing cold air.
   If you switch on the air curtain and turn up the potentiometer you can see the impeller rotating more slowly until it finally stops.
   When the impeller stops, the nozzle and the air speed are correctly adjusted.
7. Don't install air curtains in combination with strip curtains or swing doors.
8. The nozzle of the air curtain should be about 10% wider than the door opening.

Limits of operating air curtains

The light warm air escapes through the upper part of the door - heavy cold air enters through the lower part with a velocity of 1-2m/sec.
This is the normal thermally induced ventilation of warm air loss, which is prevented by air curtains.
Against air movements in the door area, caused by excessive air extraction systems air curtain are powerless.
In this case, it must be ensured that the drawn air is replaced by fresh air. So it must not be drawn through openings in the building again, in particular through open doors.
Air draft caused by differences in air pressure at opposite open doors can only be prevented with air curtains, when all doors are equipped with air curtains.

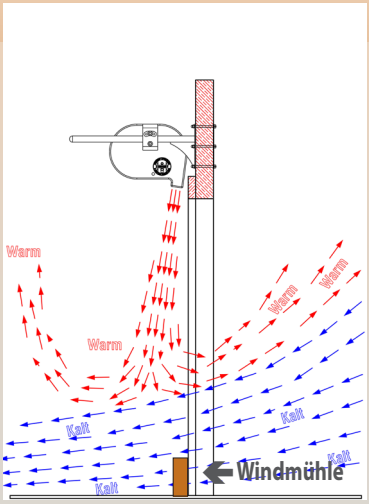

WRONG
The air speed is too low.
The airflow does not reach the floord.
Cold air flows in. Warm air flows out.
The air speed must be increased !

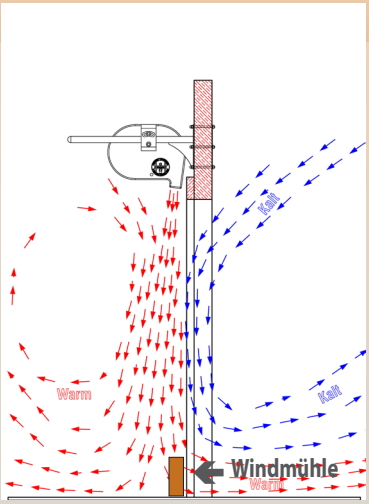

WRONG
The air velocity is too high.
Ineffective and disruptive air turbulences are incuring.
Reduce air speed!

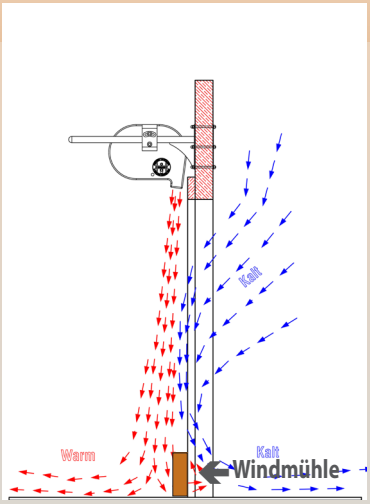

CORRECT
The impeller of the mill does not move.
The air velocity and the discharge angle are optimal. Warm air cannot escape.
Cold air cannot enter the cold room.

Easy installation - quick and simple

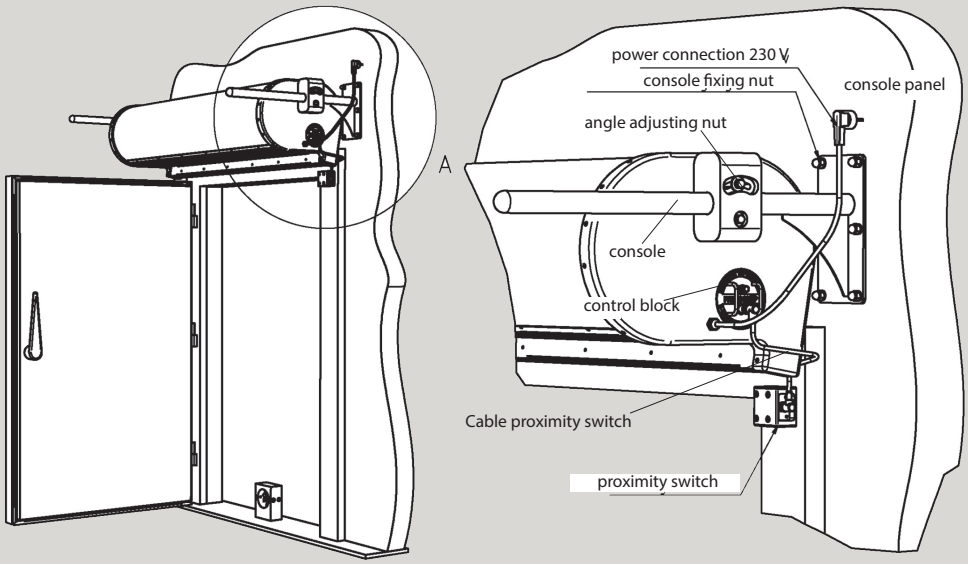

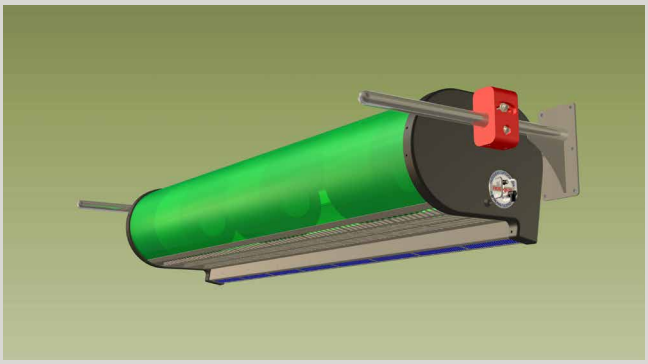

Rear wall assembly with normal construction width

The THERMOVENT is mounted with two stainless steel panels with solid polyamide blocks on the warm side of the wall above the door opening. This is the normal type of installation.

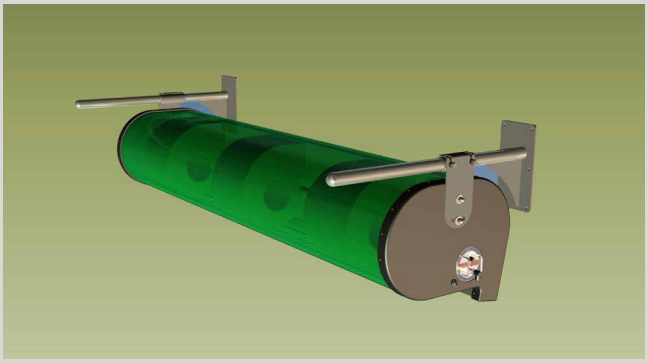

Rear wall assembly with reduction of the construction width

The THERMOVENT is mounted with two stainless steel brackets on the wall above the door opening.
These consoles take up less space in the construction width - but need more space in the height.

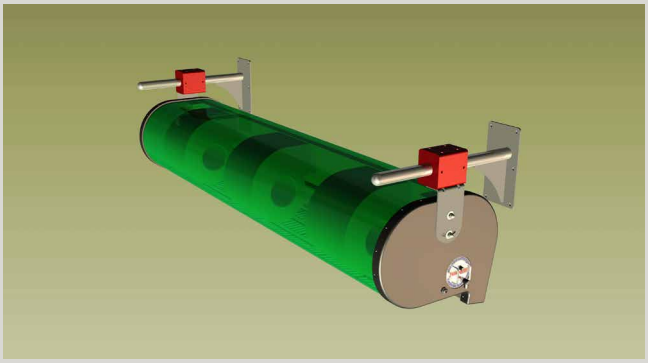

Rear wall assembly
Variable console distance

The THERMOVENT is mounted with two stainless steel brackets with solid polyamide blocks preferably on the warm side of the wall above the door opening.
If you can not mount the brackets in the right distance, it can be corrected by shifting the angle brackets below the polyamide blocks.

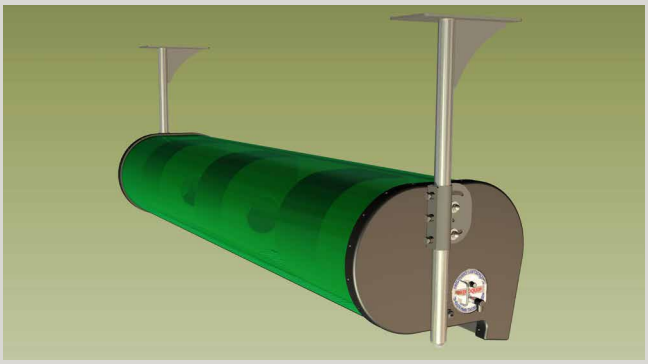

Ceiling mounting with mounting under the ceiling

The THERMOVENT is mounted with two stainless steel brackets under the ceiling above the door opening.

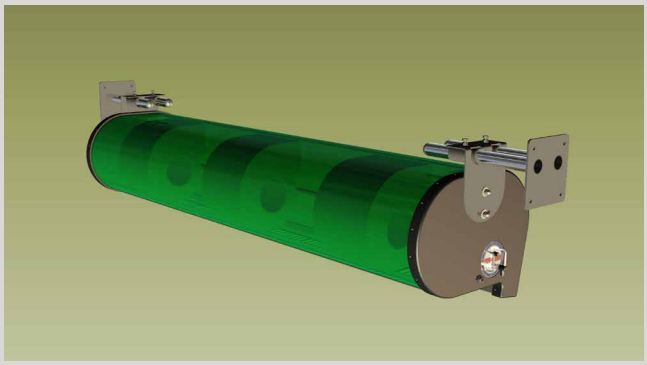

Side mounting with mounting on the side walls

The THERMOVENT is mounted with two stainless steel brackets on the side walls and in front of the door opening.
This type of installation is often used in corridors that are sealed off by air curtains against cold air loss.

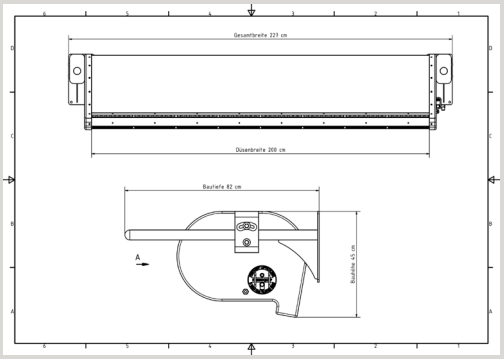
Gesamtbreite 223 cm
Düsenbreite 200 cm
Baulänge 82 cm
A
Bauhöhe 45 cm

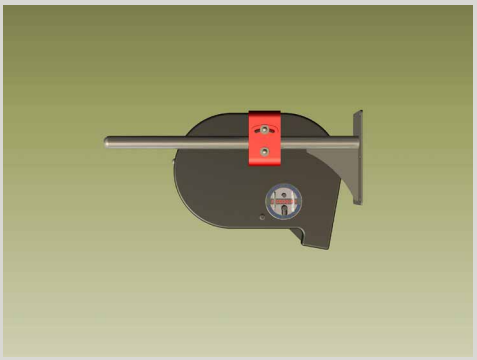

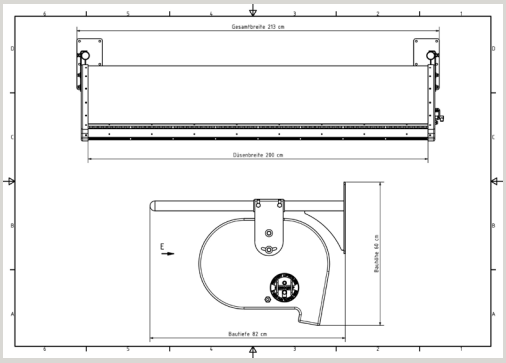
Gesamtbreite 213 cm
Düsenbreite 200 cm
E
Bauhöhe 48 cm
Baulänge 82 cm

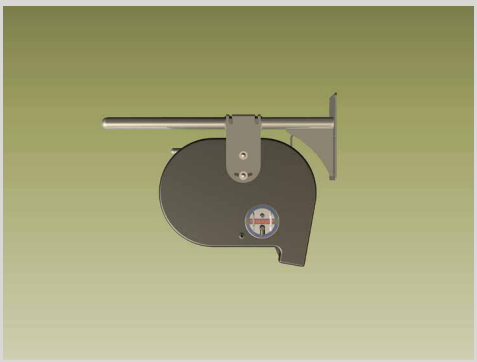

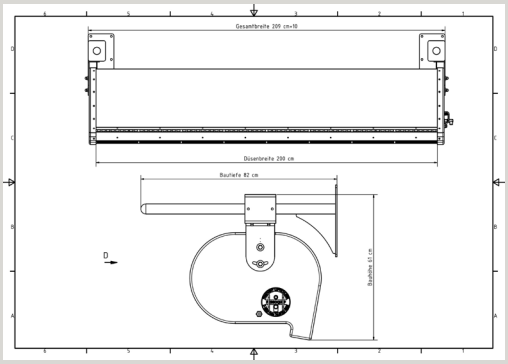
Gesamtbreite 209 cm+10
Düsenbreite 200 cm
Baulänge 82 cm
D
Bauhöhe 51 cm

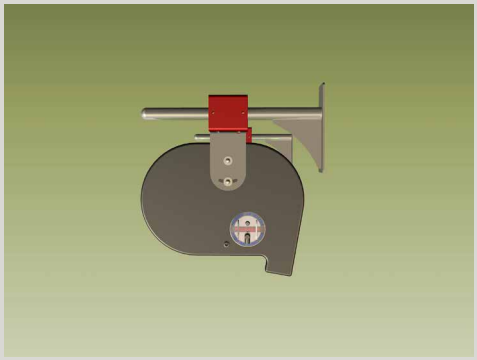

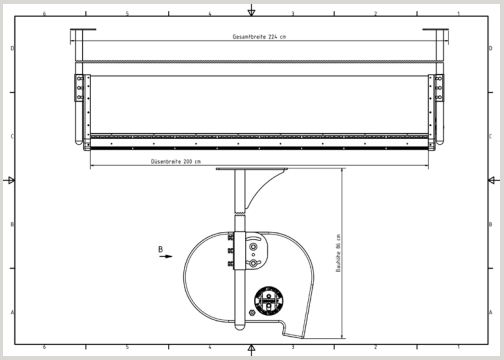
Gesamtbreite 224 cm
Düsenbreite 200 cm
B
Bauhöhe 36 cm

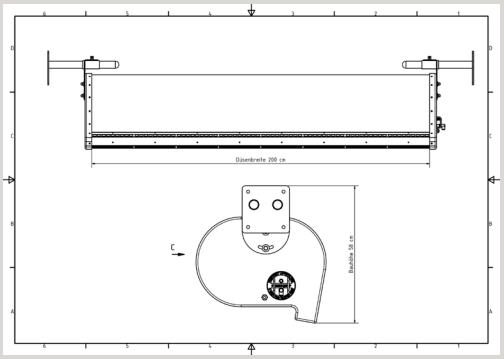
Düsenbreite 200 cm
C
Bauhöhe 58 cm

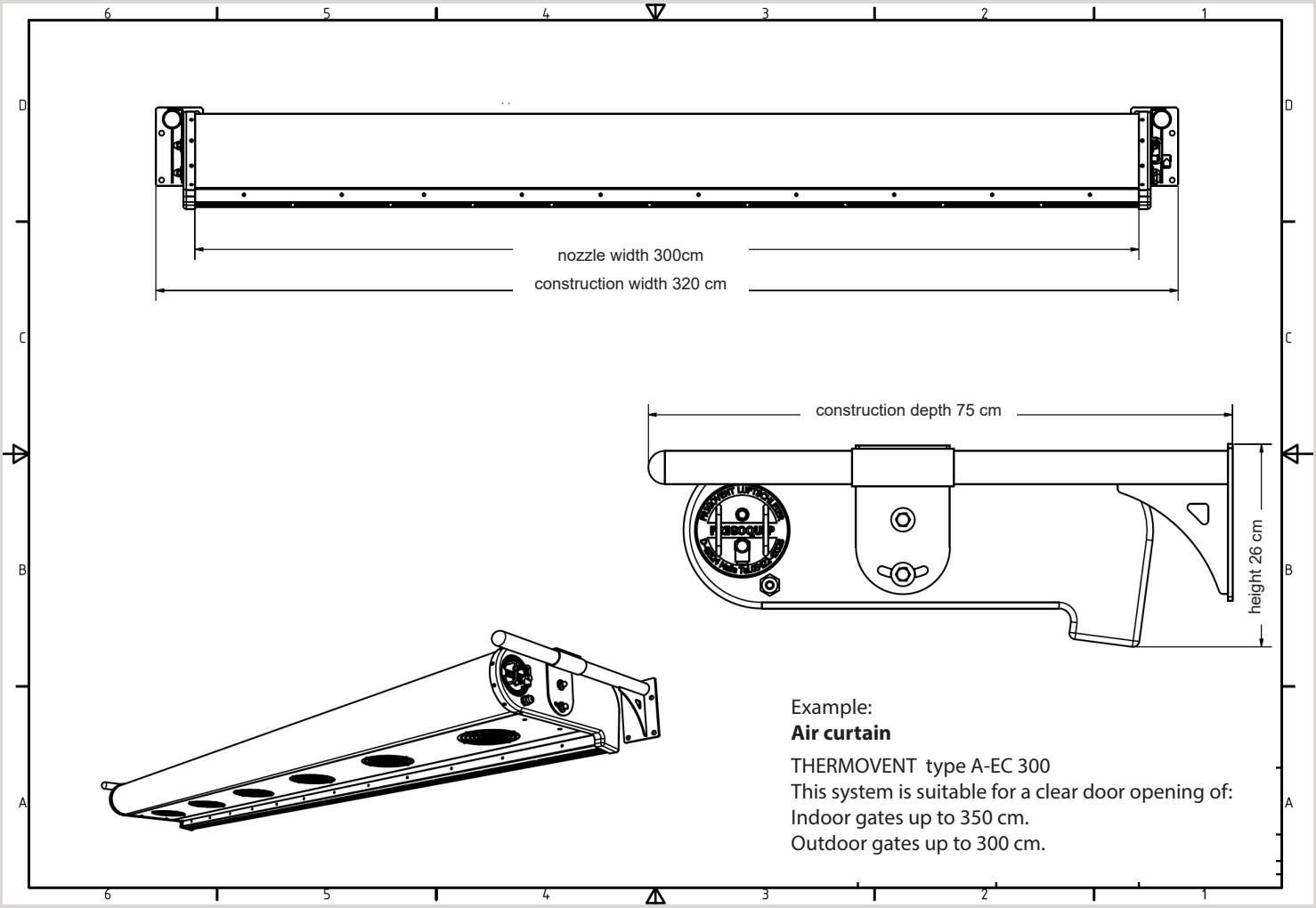

Example:
Air curtain

THERMOVENT type A-EC 300
This system is suitable for a clear door opening of:
Indoor gates up to 350 cm.
Outdoor gates up to 300 cm.

THERMOVENT

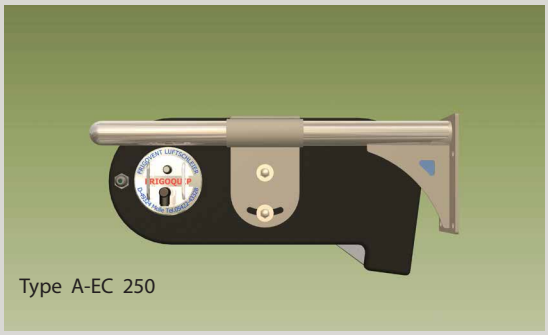
Type A-EC 250

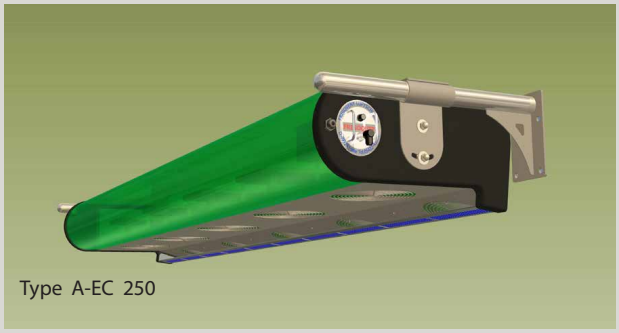
Type A-EC 250


Type A-EC 250

THERMOVENT air curtains type A are suitable for door-widths up to 600 cm and for door-heights up to 350 cm. Very low overall hight -26 cm. Especially corrosion resistant housing and blowers. Protecting class IP 54

Execution
The units are delivered complete and ready to use. A cantilevered housing with fans, outlet nozzle, consoles and electronics rack - mounted fully functional. The housing consists of a soundproof aluminum plastic composite material. Colour white. Alternatively, we can produce stainless steel housings. The blowers are equipped with electronically commutated energy-efficient EC motors. The housings of the blowers and all remaining components of the air curtain consist largely of stainless steel. Suitable for use in humid environments - Protection class IP 54.

Scope of delivery
THERMOVENT air curtain, two stainless steel brackets, stable windmill as an adjustment and proximity sensor with cable and screws. Stainless steel hardware for mounting on a panel wall or alternatively material of stainless steel to fasten at masonry.

Assembly
The air curtain can be installed by trained workers. We have several installation teams and install air curtains around the world.

Technical data THERMOVENT Type A and Type B

TYPE width of outlet nozzle cm	Blowers A	 B	Weight THERMOVENT type A THERMOVENT type B is 10% more heavy Weight with packing kg	 without packing kg	THERMOVENT type A-EC suitable for following door heights indoor gates up to 300 cm outdoor gates up to 250 cm depending of windpressure Blowers with electronically commutated motors Voltage 230/1N~/50 air power m^3/h	 nominal adsorption KW	THERMOVENT type B-EC suitable for following door heights indoor gates up to 350 cm outdoor gates up to 300 cm depending of windpressure Blowers with electronically commutated motors Voltage 230/1N~/50 air power $^3/h$	 nominal adsorptionm KW
THERMOVENT					**Type A**		**Type B**	
75	1	2	54	34	**1.000**	0,15	**2.000**	0,30
100	2	3	66	43	**2.000**	0,30	**3.000**	0,45
125	2	3	79	53	**2.000**	0,30	**3.000**	0,45
150	3	4	93	64	**3.000**	0,45	**4.000**	0,60
175	3	5	109	76	**3.000**	0,45	**5.000**	0,75
200	4	6	121	85	**4.000**	0,60	**6.000**	0,90
225	4	6	136	97	**4.000**	0,60	**6.000**	0,90
250	5	7	150	108	**5.000**	0,75	**7.000**	1,05
275	5	8	164	119	**5.000**	0,75	**8.000**	1,20
300	6	9	178	130	**6.000**	0,90	**9.000**	1,35
325	6	9	189	138	**6.000**	0,90	**9.000**	1,35
350	7	10	203	149	**7.000**	1,05	**10.000**	1,50
375	7	11	221	163	**7.000**	1,05	**11.000**	1,65
400	8	12	231	170	**8.000**	1,20	**12.000**	1,80
425	8	12	246	182	**8.000**	1,20	**12.000**	1,80
450	9	13	260	193	**9.000**	1,35	**13.000**	1,95
475	9	14	274	204	**9.000**	1,35	**14.000**	2,10
500	10	15	288	215	**10.000**	1,50	**15.000**	2,25
525	10	15	302	226	**10.000**	1,50	**15.000**	2,25
550	11	16	315	236	**11.000**	1,65	**16.000**	2,40
575	11	17	331	248	**11.000**	1,65	**17.000**	2,55
600	12	18	346	260	**12.000**	1,80	**18.000**	2,70

optional extras

All curtains are available for 110 Volt for 60 Hz. as well as 50 Hz.

Off and on switch with control lamp instead of proximity switch - for continuous operation of the air curtain.

Special consoles - Reduction of the width - Installation under the ceiling - Fixing to the side walls

Side windshield made of soft PVC strips to avoid lateral air intake.

Separate switch box with speed controller and on- and off switch.

Housing made from stainless steel surface matt finished.

Duplex Execution - two air curtains for one door - one curtain outside over the door - one curtain inside. For better performance.

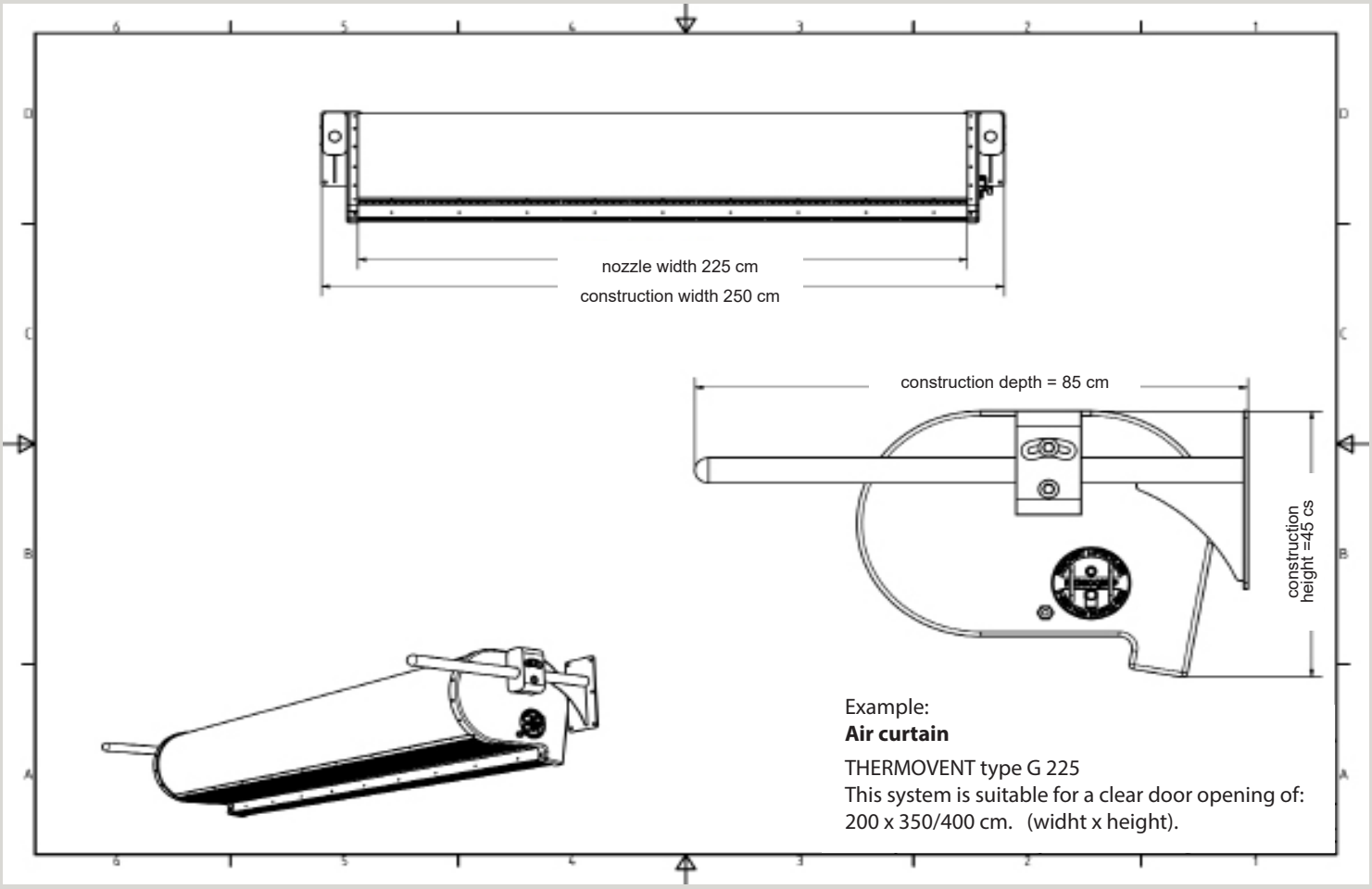

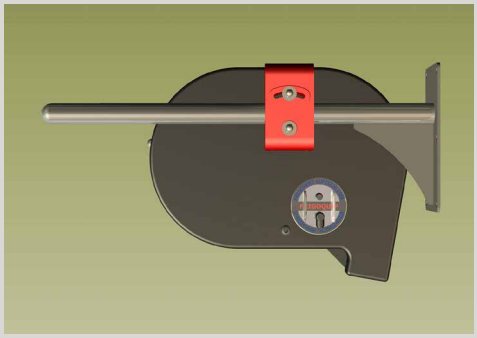

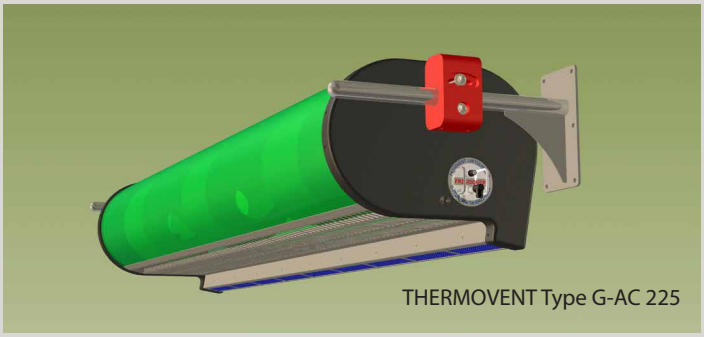
THERMOVENT Type G-AC 225

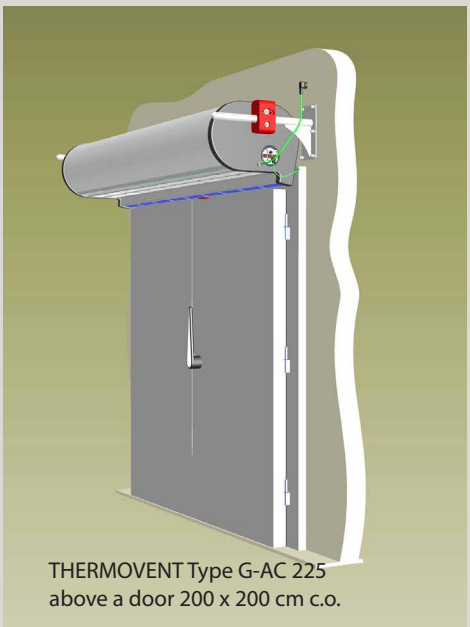
THERMOVENT Type G-AC 225
above a door 200 x 200 cm c.o.

THERMOVENT type F and G for doors with a width up to 600 cm and for doors with a height up to max. 400 cm.

Execution
The systems are delivered complete and ready to use. A cantilevered housing with fans, outlet nozzle, consoles and electronics rack - mounted fully functional.
The housing consists of a soundproof aluminum plastic composite material. Colour white. Alternatively, we can make a stainless steel housing.
The blowers are optionally equipped with electronically commutated energy-efficient EC motors or with normal AC motors.
The remaining components of the system consist largely of stainless steel.

Scope of delivery
THERMOVENT air curtain system, two stainless steel brackets, stable wind turbine as an adjustment and proximity sensor with cable and screw. Stainless steel mounting hardware for mounting on a panel wall or alternatively material to fasten at masonry.

Assembly
The air curtain can be installed by trained workers. We have several installation teams and install air curtains around the world.

Technical Data THERMOVENT Type F und Type G

TYPE nozzle width cm	blowers pieces	weight THERMOVENT type F THERMOVENT type G They are 10% heavier Weight brut kg	net kg	THERMOVENT type F-AC with AC-radial blowers suitable for a clear door opening of Indoor doors up to 300 cm Outdoor doors up to 250 cm depending form windload Voltage 230/1N~/50-60. air power m³/h	Power consumption KW	THERMOVENT type G-AC with AC-radiall blowers suitable for a clear door opening of Indoor doors up to 400 cm Outdoor doors up to 350 cm depending form windload Voltage 400/3N~/50-60 air power m³/h	Power consumption KW
THERMOVENT				**Type F-AC**		**Type G-AC**	
75	1	49	29	**1.000**	0,15	**2.000**	0,450
100	1	55	32	**1.000**	0,30	**2.000**	0,450
125	2	64	38	**2.000**	0,30	**4.000**	0,900
150	2	70	41	**2.000**	0,30	**4.000**	0,900
175	3	80	48	**3.000**	0,45	**6.000**	1,350
200	3	86	51	**3.000**	0,45	**6.000**	1,350
225	3	92	54	**3.000**	0,45	**6.000**	1,350
250	4	101	60	**4.000**	0,60	**8.000**	1,800
275	4	107	63	**4.000**	0,60	**8.000**	1,800
300	5	117	70	**5.000**	0,75	**10.000**	2,250
325	5	123	73	**5.000**	0,75	**10.000**	2,250
350	5	129	76	**5.000**	0,75	**10.000**	2,250
375	6	138	82	**6.000**	0,90	**12.000**	2,700
400	6	144	85	**6.000**	0,90	**12.000**	2,700
425	7	154	92	**7.000**	1,05	**14.000**	3,150
450	7	160	95	**7.000**	1,05	**14.000**	3,150
475	7	166	96	**7.000**	1,05	**14.000**	3,150
500	8	175	104	**8.000**	1,20	**16.000**	3,600
525	8	181	107	**8.000**	1,20	**16.000**	3,600
550	9	191	114	**9.000**	1,35	**18.000**	4,050
575	9	197	117	**9.000**	1,35	**18.000**	4,050
600	9	203	120	**9.000**	1,35	**18.000**	4,050

OPTIONAL

- With EC blowers with electronically commutated electric motors up to 30% lower power consumption
- On and off switch with indicator lamp instead of proximity switch for permanent use of the air curtain
- Special consoles for the reduction of the width, for mounting under the ceiling or at the side walls
- Side windshield made of soft PVC stripes to avoid lateral air intake.
- Separate control box with speed controller and switch instead of switching in the device.
- Housing made of stainless steel surface matt finish.

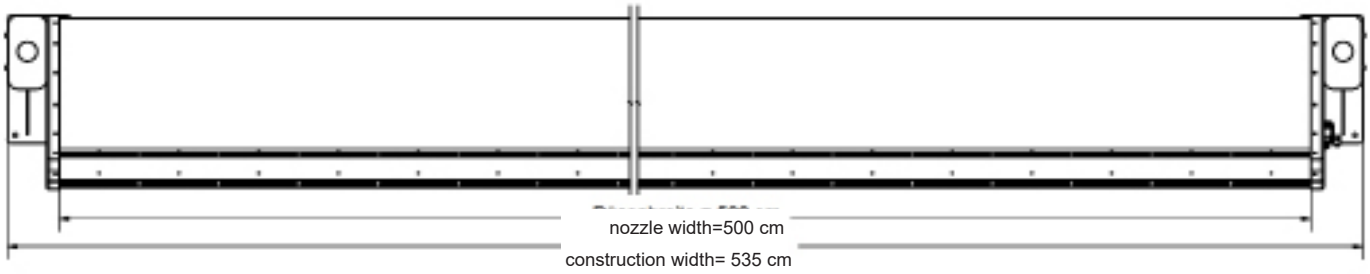

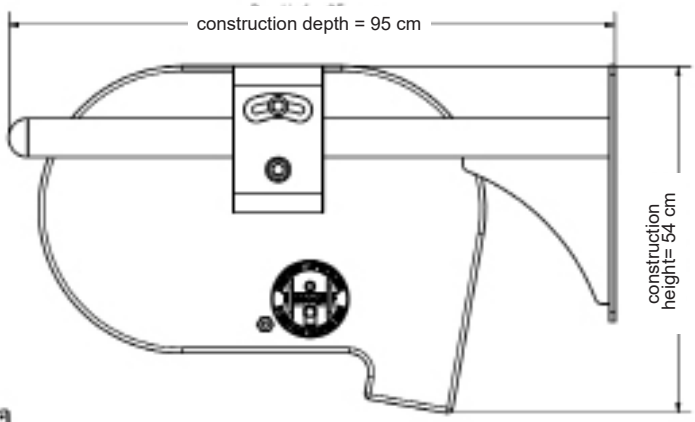

Example:
Air curtain THERMOVENT type M 500.
This unit is suitable for a clear door opening of: 475 x max. 400 /500 cm (width x height).

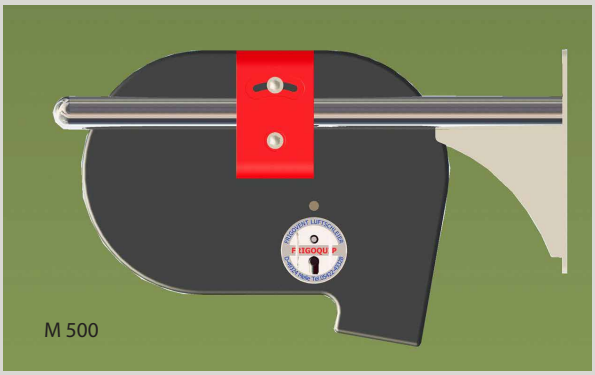

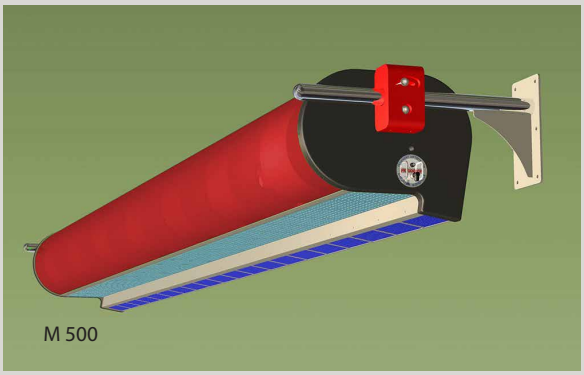

THERMOVENT type M and S
for doors width up to 600 cm and
für a doors height up to max. 600 cm.

Execution
The air curtains are delivered complete and ready to use. A cantilevered housing with blowers, outlet nozzle, consoles and electronics rack - mounted fully functional.
The housing consists of a soundproof aluminum plastic composite material. Colour white.. Alternatively, we can produce stainless steel housings.
The blowers of the types M and S are optionally equipped with electronically commutated energy-efficient EC motors or with normal AC motors.

Air curtains with EC blowers are more expensive but EC blowers consume 30% less electricity

Therefore we recommend for doors which are open for long periods, air curtains with energy-saving EC fans. The remaining components of the air curtains consist largely of stainless steel.

Scope of delivery
THERMOVENT air curtain, two stainless steel brackets, a windmill as a help to adjust the system and a proximity sensor with cable and screws. Stainless steel mounting hardware for mounting at a panel wall or alternatively material to fasten at masonry.

Assembly
The air curtain can be installed by trained workers. We have several installation teams and install air curtains around the world.

Technical data THERMOVENT Type M und Type S

Type nozzle width cm	blowers pieces	Weight THERMOVENT type M THERMOVENT type S They are 10% heavier Weight brut kg	net kg	THERMOVENT type M-AC with AC-Radial blowers suitable for a clear door opening of Indoor doors up to 500cm Outdoor doors up to 400cm depending from windload Voltage 400/3N~/50-60 air power m³/h	power consumtion KW	THERMOVENT type S-AC with AC-Radial blowers suitable for a clear door opening of Indoor doors up to 600cm Outdoor doors up to 500cm depemdomg from windload Voltage 400/3N~/50-60 air power m³/h	power consumption KW
THERMOVENT				**Type M-AC**		**Type S-AC**	
100	1	70	41	**3,000**	0,70	**4.000**	1,0
125	2	87	54	**6.000**	1,40	**8.000**	2,0
150	2	95	58	**6.000**	1,40	**8.000**	2,0
175	3	115	74	**9.000**	2,10	**12.000**	3,0
200	3	123	78	**9.000**	2,10	**12.000**	3,0
225	3	131	82	**9.000**	2,10	**12.000**	3,0
250	4	148	95	**12.000**	2,80	**16.000**	4,0
275	4	156	99	**12.000**	2,80	**16.000**	4,0
300	5	176	115	**15.000**	3,50	**20.000**	5,0
325	5	184	119	**15.000**	3,50	**20.000**	5,0
350	5	192	123	**15.000**	3,50	**20.000**	5,0
375	6	209	136	**18.000**	4,20	**24.000**	6,0
400	6	217	140	**18.000**	4,20	**24.000**	6,0
425	7	237	156	**21.000**	4,90	**24.000**	6,0
450	7	245	160	**21.000**	4,90	**28.000**	7,0
475	7	253	164	**21.000**	4,90	**28.000**	7,0
500	8	270	177	**24.000**	5,60	**32.000**	8,0
525	8	278	181	**24.000**	5,60	**32.000**	8,0
550	9	298	197	**27.000**	6,30	**36.000**	9,0
575	9	306	201	**27.000**	6,30	**36.000**	9,0
600	9	314	205	**27.000**	6,30	**36.000**	9,0

OPTIONAL

- EC blowers with electronically commutated electric motors up to 50% lower power consumption.
- On-off Switch with indicator lamp instead of proximity switch for permanent use of the air curtain
- Special consoles for the reduction of the width, for mounting under the ceiling or at the side walls
- Side windshield made of soft PVC stripes to avoid lateral air intake.
- Separate control box with speed controller and switch instead of switching in the device.
- Housing made of stainless steel surface matt finish.


FRIGOVENT


FRIGOVENT
nsa Service
TOTAL


HERM
ftschle
die Wärme
im Betrieb
P. Rohrn
ww.therm

FRIGOQUIP
Air curtain technology
Postbox 1460
D-49324 Melle /Germany

Phone 0049 5422-43328
Fax 0049 5422-43397

info@thermovent.eu
www. thermovent.eu